BF115T4A110

FOUR-POLE CONTACTOR, IEC OPERATING CURRENT ITH (AC1) = 160A, AC COIL 50/60HZ, 110VAC



AC coil operating

AC operating voltage

of 50/60Hz coil powered at 50Hz			
pick-up			
	max	%Us	110
drop-out			
	min	%Us	20
	max	%Us	55
of 50/60Hz coil powered at 60Hz			
pick-up			
	min	%Us	85
	max	%Us	110
drop-out			
	min	%Us	40
	max	%Us	55

Dimensions

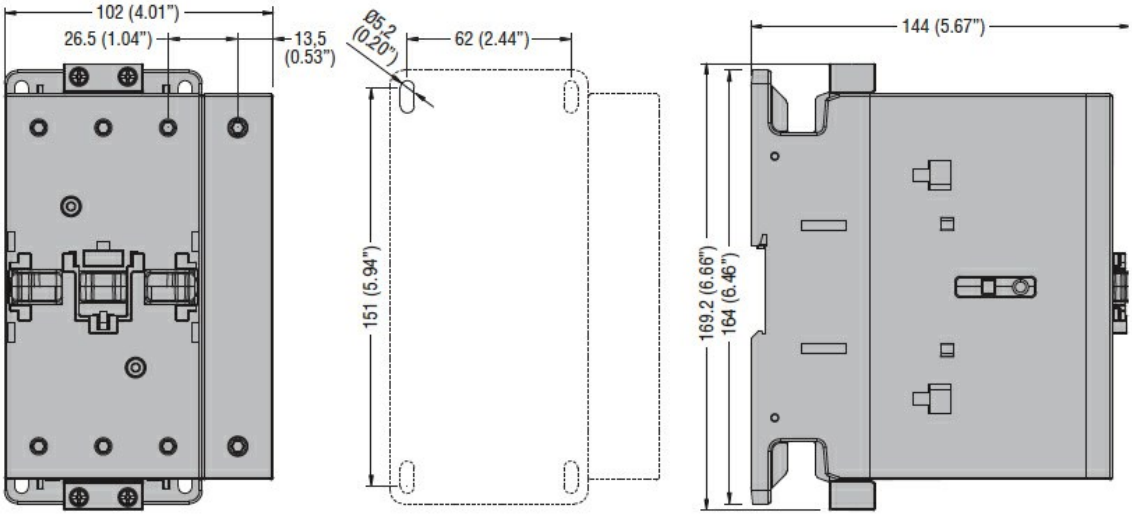

Wiring diagrams

The characteristics described in this document are subject to updates or modifications at any time. The descriptions, technical and functional information, illustrations and instructions in this brochure are purely illustrative, and are consequently not contractually binding

BF115T4A110

FOUR-POLE CONTACTOR, IEC OPERATING CURRENT ITH (AC1) = 160A, AC COIL 50/60HZ, 110VAC

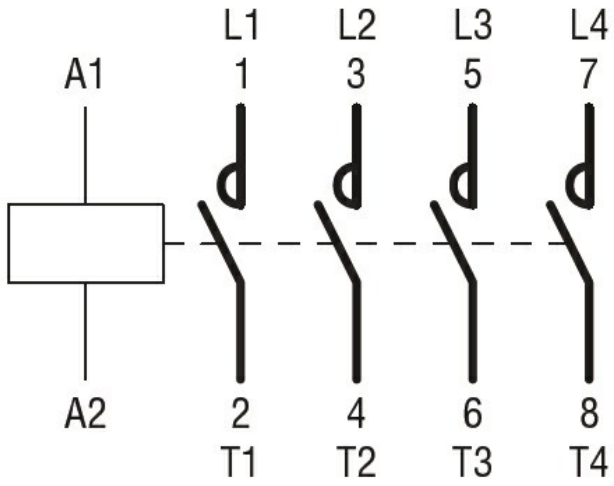

Certifications and compliance

Compliance

CSA C22.2 n° 60947-1
CSA C22.2 n° 60947-4-1
IEC/EN 60947-1
IEC/EN 60947-4-1
UL 60947-1
UL 60947-4-1

Certifications

CCC
cULus
EAC

ETIM 6 classification

EC000066 - Power contactor, AC switching

The characteristics described in this document are subject to updates or modifications at any time. The descriptions, technical and functional information, illustrations and instructions in this brochure are purely illustrative, and are consequently not contractually binding