

TB 45

Temperature limiter / monitor

Compact design
Suitable for heating and refrigeration processes
For all thermocouple types and resistive sensors
Display & operating functions
Communication functions
Two relay outputs
Analog output
Two universal inputs
Reset via front key combination / external contact
Type-tested to DIN 3440 / EN 14597

rail line

FEATURES

- Configurable as limiter, monitor, or limit signaller
- Compact design, only 22.5 mm wide
- Clips onto top-hat DIN rail
- Plug-in screw terminals or spring-clamp connectors
- Dual-line LC display with additional display elements
- Convenient 3-key operation
- Communication via bus connector fitted in top-hat rail
- BluePort® front interface
- Two universal inputs (only for device type TB45-1)
- Two relay outputs
- Two pre-alarms
- Universal output for display values

APPLICATIONS

- All plants, in which an exceeded min/max temperature limit can cause serious damage.
- Heating system in buildings to DIN EN 12828
- Large hot-water boilers to DIN EN 12953-6
- Thermal transfer plants with organic heat transfer media to DIN 4754
- Oil-fired installations to DIN 4755
- Limit signalling function for any type of input signal
- ...

DESCRIPTION

The temperature limiter TB 45 is intended for precise, cost-effective signal monitoring & limiting tasks.

Every TB 45 is fitted with at least one universal input and two output relays.

Optionally, the TB 45 can be supplied with an analog output for display purposes.

Galvanic isolation is provided between inputs and outputs as well as from the supply voltage and the communication interfaces.

Mounting

The compact TB 45 is clipped onto a top-hat DIN rail, and can also be unmounted very simply.
All connections are of the plug-in type, so that a device can be replaced very quickly without disturbing the wiring.

Display and operation

The dual-line LC display permits simultaneous indication of the measured value and all of the unit's operating functions.

Moreover, a LED and 4 other display elements give a reliable indication of operating status, operating mode, and error messages.

The user-configurable engineering unit of the measured value can be included in the display. By means of the extended Operating Level, it is possible to show any signal or parameter in the 2nd display line.

Interfaces and Engineering Tools

The limiter's settings are also configurable by means of an Engineering Tool.

Via the BlueControl® software (which includes a limiter simulation), and especially the convenient connection via the BluePort® front interface, the user can solve the task in hand without having to work through operating instructions.

Of course, practically all settings can also be made from the device front.

Moreover, the TB 45 can exchange data with superordinate PLCs and PCs via an optional RS 485 interface with Modbus RTU protocol that is fitted into the top-hat DIN rail.

Devices with option system interface can be connected to fieldbus coupler of the *rail line* series.

Password protection

Unauthorized access to the limit settings and the Operating Levels is prevented with a password.

TECHNICAL DATA

INPUTS

Survey of inputs

Input	Purpose
INP1	X1 (process value 1), universal input
INP2 (Option)	X2 (process value 2), universal input; input for additional limit monitoring and display
di1	Operation disabled; Reset of stored alarms

UNIVERSAL INPUT INP1

Type: single-ended, except thermocouples

Resolution:	> 14 bits
Decimal point:	0 to 3 decimals
Digital input filter:	adjustable 0.0...999.9 s
Scanning cycle:	100 ms
Linearization:	15 segments, adaptable with BlueControl®
Measurement value correction:	2-point or offset

Thermocouples (Table 1)

Input resistance:	≥ 1 MΩ
Influence of source resistance:	1 µV/Ω
Input circuit monitor	break, reversed polarity

Cold-junction compensation

- Internal
  - additional error:
    typical: ≤± 0.5 K
    max.: ≤ +1.2 K
- External 0...100 °C

Break monitoring

Sensor current: ≤ 1 µA

Operating sense configurable

Resistive sensors (Table 2)

Connection technique:	3-wire or 4-wire (only for device type TB45-1)
Lead resistance (for max. span):	max. 30 Ω
Input circuit monitoring:	break and short circuit

Measurement span

separated into ranges

Physical measurement range: 0...4,500 Ω

The BlueControl® software enables the internal characteristic curve for the KTY 11-6 temperature sensor to be adapted.

Current and voltage measurement (Table 3)

Span start and span:	anywhere within the measurement range
Scaling:	freely selectable –1,999...9,999

Table 1: Thermocouple input

Thermocouple type		Measurement range		Accuracy	Typical resol.
L	Fe-CuNi (DIN)	-100... 900°C	-148... 1,652°F	≤ 2K	0.1 K
J	Fe-CuNi	-100... 1,200°C	-148... 2,192°F	≤ 2K	0.1 K
K	NiCr-Ni	-100... 1,350°C	-148... 2,462°F	≤ 2K	0.2 K
N	Nicrosil/Nisil	-100... 1,300°C	-148... 2,372°F	≤ 2K	0.2 K
S	PtRh-Pt 10%	0... 1,760°C	32... 3,200°F	≤ 2K	0.2 K
R	PtRh-Pt 13%	0... 1,760°C	32... 3,200°F	≤ 2K	0.2 K
T**	Cu-CuNi	-200... 400°C	-328... 752°F	≤ 2K	0.05 K
C	W5%Re-W26%Re	0... 2,315°C	32... 4,199°F	≤ 3K	0.4 K
D	W3%Re-W25%Re	0... 2,315°C	32... 4,199°F	≤ 3K	0.4 K
E	NiCr-CuNi	-100... 1,000°C	-148... 1,832°F	≤ 2K	0.1 K
B*	PtRh-Pt6%	0(400)... 1,820°C	32(752)... 3,308°F	≤ 3K	0.3 K
Special		-25 … +75 mV		≤ 0.1%	0.01%

** Values apply from 400 °C upwards*
***Values apply from -80°C upwards*

Table 2: Resistive inputs

Type	Sensor current	Measurement range		Accuracy	Typical resol.
Pt100 ***	≤ 0.25 mA	-200.. 100(150)°C	-328... 212(302)°F	≤ 1 K	0.1 K
Pt100		-200... 850°C	-328... 1,562°F	≤ 1 K	0.1 K
Pt1000		-200... 850°C	-328... 1,562°F	≤ 2 K	0.1 K
KTY 11-6*		-50... 150°C	-58... 302°F	≤ 2 K	0.1 K
Special		0...4,500 Ω**		≤ 0.1%	0.01%
Special		0...450 Ω**		≤ 0.1%	0.01%
Potentiom.		0...160 Ω**		≤ 0.1%	0.01%
Potentiom.		0...450 Ω**		≤ 0.1%	0.01%
Poti		0...1,600 Ω**		≤ 0.1%	0.01%
Poti		0...4,500 Ω**		≤ 0.1%	0.01%

** Default setting is the characteristic for KTY 11-6 (-50...150°C)*
*** Including lead resistance*

Table 3: Current and voltage input

Measurement range	Input resistance	Accuracy	Typical resol.
0... 20 mA	20 Ω	≤ 0.1 %	1,5 µA
0... 10 V	≈ 110 kΩ	≤ 0.1 %	0,6 mV
-10... 10 V	≈ 110 kΩ	≤ 0.1 %	1,2 mV
-5... 5 V	≈ 110 kΩ	≤ 0.1 %	0,6 mV
-2,5... 115 mV*	> 1 MΩ	≤ 0.1 %	6 µV
-25... 1,150 mV*	> 1 MΩ	≤ 0.1 %	60 µV
-25... 90 mV*	> 1 MΩ	≤ 0.1 %	8 µV
-500... 500 mV*	> 1 MΩ	≤ 0.1 %	80 µV
-200... 200 mV*	> 1 MΩ	≤ 0.1 %	40 µV

** For INP1: high-impedance, without break monitoring*
for INP2: high impedance, break monitoring always active

Input circuit monitoring (current): 12.5% below span start (2 mA)

O_2- measuring (option)

EMI-measuring by means of INP1 (high-impedance mV-inputs) suitable for probes with

- constant sensor temperature (heated probes), setting by means of parameter
- measured sensor temperature (non-heated probes), measuring by means of INP2

ADDITIONAL INPUT INP2 (UNIVERSAL, OPTIONAL)

Only for device type TB45-1

Resolution:	> 14 bits
Digital input filter:	adjustable 0.0...999.9 s
Scanning cycle:	100 ms
Linearization:	as for INP1
Measurement value correction:	2-point or offset
Type:	single-ended except thermocouples

Thermocouples (Table 1)

Cold-junction compensation

- Internal
  - additional error:
    typical: ≤± 0.5 K
    max.: ≤ -2.5 K
- External 0...100 °C

Remaining technical data as for INP1.

Resistive sensors (Table 2)

Connection technique: 3-wire

Measurement span

Remaining technical data as for INP1.

Current and voltage measurement (Table 3)

Remaining technical data as for INP1 except:

- Voltage input ranges –10...0...+10V and -5...+5V not possible.
- Millivolt input ranges: break monitoring always active.

CONTROL INPUT DI1 (RESET)

Configurable as direct or inverse switch or **push button**!

Contact input

Connection of potential-free contact that is suitable for switching 'dry' circuits.

Switched voltage:	5 V
Switched current:	1 mA

Optocoupler input

Actively switched optocoupler input

Nominal voltage:	24 V DC external
Logic "0":	-3 V…+5 V
Logic "1":	15 V…30 V
Current demand:	max. 6 mA

OUTPUTS

SURVEY OF OUTPUTS

Output	Purpose
LC (relay)	Limit contact, alarms *
OUT2 (relay)	Limit contact, alarms, errors *
OUT3 (logic, option)	Same as OUT2
OUT3 (continuous, option)	Analog output (display value, Inp1, Inp2), Transmitter supply

** All logic signals can be "OR-linked".*

RELAY OUTPUTS LC, OUT2

Type:	2 NO contacts with a common terminal
Max. contact rating:	500 VA, 250 VAC, 2A at 48...62 Hz, resistive load
Min. contact rating:	6V, 1 mA DC
Switching cycles (electrical):	for I=1A/2A: ≥ 800,000/500,000 (at 250VAC, resistive load)

Note:

If the relays OUT1 and OUT2 operate external contactors, these must be fitted with RC snubber circuits to manufacturer specifications to prevent excessive voltage peaks at switch-off.

OUT3 AS UNIVERSAL OUTPUT (OPTION)

Galvanically isolated from the inputs. Parallel current/voltage output with common 'minus' terminal (combined use only in galvanically isolated circuits).

Freely scalable

Resolution:	14 bits
Tracking error I/U:	≤ 2 %
Residual ripple: (referred to end of span)	≤±1% 0...130 kHz

Current output

0/4...20 mA, configurable
short-circuit proof

Control range:	-0.5...23 mA
Load:	≤ 700 Ω
Load effect:	≤ 0.02%
Resolution:	≤ 1.5 µA
Error:	≤ 0.1%

Voltage output

0/2...10V, configurable
not continuously short-circuit proof

Control range:	-0.15...11.5 V
Load:	≥ 2 kΩ
Load effect:	≤ 0.06%
Resolution:	≤ 0.75 mV
Error:	≤ 0.1%
Additional error with simultaneous use of current output	≤ 0.09%

OUT3 as transmitter supply

Output:	22 mA / ≥ 13 V

OUT3 as logic signal

Load ≤ 700 Ω	0/≤ 23 mA
Load > 500 Ω	0/> 13 V

GALVANIC ISOLATION (FIG. 1)

Galvanic isolation is provided between inputs and outputs as well as from the supply voltage (3-port-isolation).
Test voltage:

Between power supply and in-/outputs:	2.3 kV AC, 1 min
Between input and output:	500 V AC; 1min

Isolation:

between in-/output against earth:	≤ 33 V AC

Fig.1: galvanic isolation

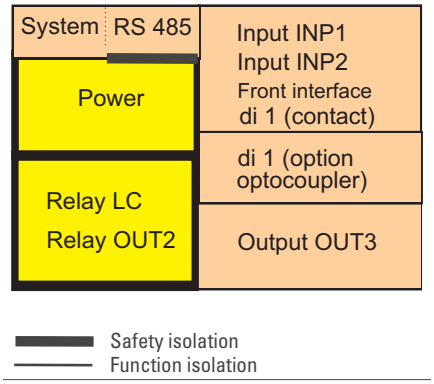

FUNCTIONS

LC RELAY OUTPUT

Interruption of the power supply if the upper or lower limit for the process value is exceeded.
Possible operation as:

Limiter

- Switch-off if a limit is exceeded
- Output is re-enabled when the process value is within limits again (incl. hysteresis), and the electronic latch has been released manually via the reset function.

Monitor

- Switch-off if a limit is exceeded
- Output is re-enabled automatically when the process value is within limits again (incl. hysteresis).

Limit signaller

- Limit signalling function (see below)

Process value settings:

INP1, optional difference INP1-INP2, MAX/MIN (INP1, INP2), O_2 measurement.

OTHER LIMIT SIGNALLING FUNCTIONS

MAX, MIN or MAX+MIN monitoring with adjustable hysteresis
2 additional alarms available.

Monitored signals

- Process value (absolute)
- Difference to limit contact LC (relative)
- Input 1
- Input 2

Functions

- Input circuit monitoring
- Input circuit monitoring with latching

Several limit and alarm signals can be "OR-linked" for output.

ALARMS

Sensor break/short circuit
Depending on the selected input type, the input circuit is monitored for break, short circuit, and reversed polarity.
Behaviour on sensor break / short circuit

- Response of the analog output is selectable (upscale / downscale)

SIGNAL LINKING (OPTION)

Additional combinations if INP2 is fitted:

- Difference INP1 - INP2
- Max. value selection INP1, INP2
- Min- value selection INP1, INP2
- O_2 measurement with constant sensor temperature (INP1: mV input)*
- O_2 measurement with measured sensor temperature (INP1: mV input, INP2: temperature input)*

* *Precise calculation using Nernst equation.*

Fig. 2: Connections TB 45-1 temperature monitor

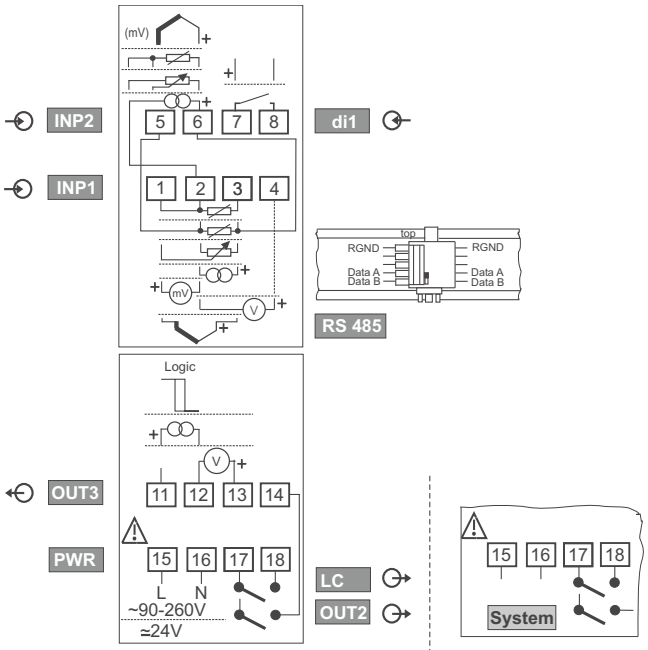

Fig. 3: Connections TB 45-2 temperature limiter

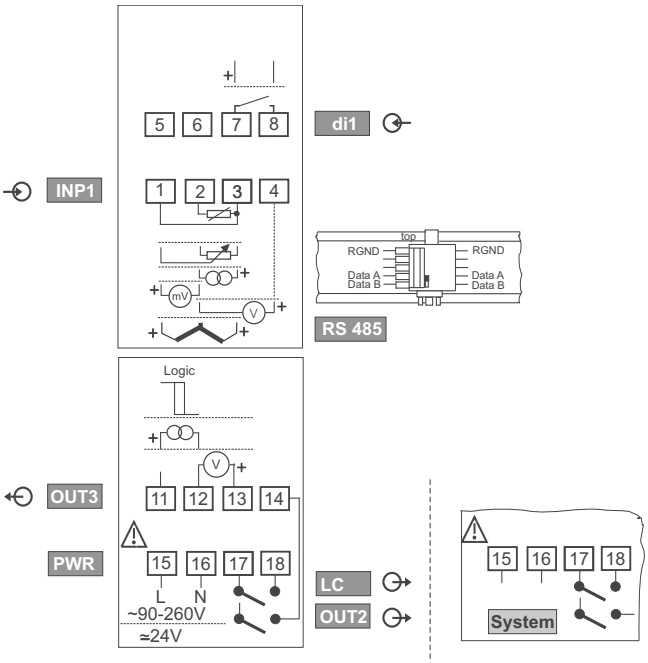

DISPLAY AND OPERATION

Display

LCD

dual-line plus additional display elements

Upper line

4 digits, 7 segments for:

- Process value
- Limit value of LC

Lower line

5 digits, 14 segments; configurable contents (via BlueControl®)

- Engineering unit
- Parameters
- Extended Operating Level

Additional display elements

4 display elements (bars in the lower line of the LCD)

- Identifiers 1 & 2 : LC/OUT2 active
- Identifier TB:
  Adjusted function as temperature limiter.
- Identifier E:
  Entry has been made in the error list.

LED

Dual-colour

- Green: OK
- Green, blinking: no data exchange with bus coupler (only for devices with system option)
- Red: limit value Lim1/LC exceeded
- Red, blinking: internal fault

Operating functions

Only three keys at the front of the TB 45 are used to operate process values, parameters, and configuration data. Different Operating Levels and

selected parameters can be disabled by means of BlueControl®.

MAINTENANCE MANAGER

Display of error messages, warnings, and stored limit value messages in the error list. Messages are stored, and can be reset manually.
Possible elements in the error list:

Sensor break, short circuit, incorrect polarity
Stored limit values
e.g. re-calibration warning (message is generated when a predefined operating time is reached)
e.g. maintenance interval for a switching device (message is generated when a predefined number of switching cycles is reached)
Internal fault (RAM, EEPROM, ...)

POWER SUPPLY

Depending on ordered version:

AC supply

Voltage:	90...250 V AC
Frequency:	48...62 Hz
Power consumption:	approx. 9 VA max.

Universal supply 24 V UC*

AC voltage:	18...30 V AC
Frequency:	48...62 Hz
DC voltage:	18...31 V DC
Power consumption:	approx. 4 VA / 3W max.

Supply only from protective low-voltage sources (SELV)

** Devices with system option:*
They are supplied via the bus connector from bus coupler or power supply module.

Behaviour with power failure

Configuration and parameter settings:
Permanent storage in EEPROM

BLUEPORT® FRONT INTERFACE

Connection to the transmitter front via a PC adapter (see 'Accessories'). The BlueControl® software enables the TB 45 to be configured, parameters set, and operated.

BUS INTERFACE (OPTIONAL)

RS 485

Connection via bus connector fitted in the top-hat rail. Screened cables should be used.

Galvanically isolated

Fig. 4: Dimensions

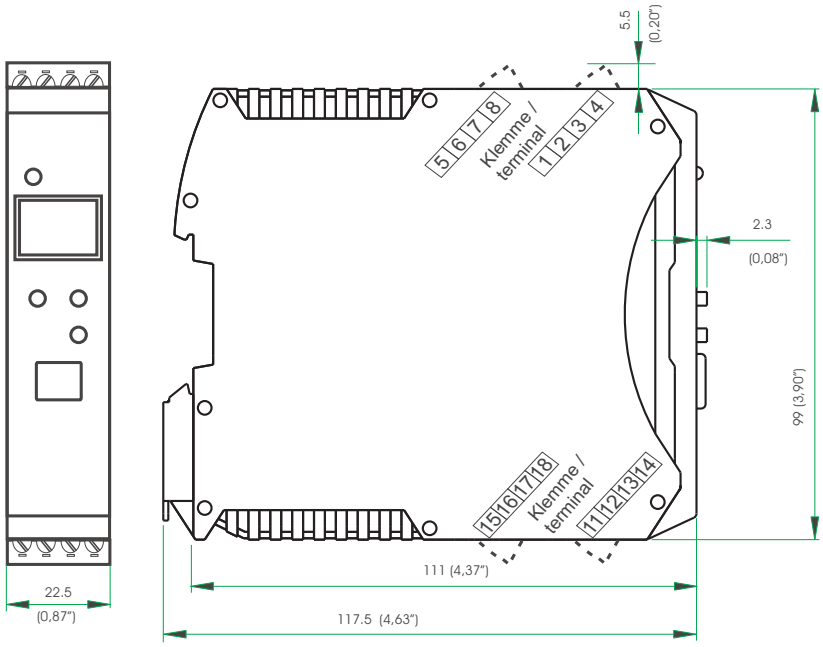

Type:	RS 485
Transmission speed:	2,400, 4,800, 9,600, 19,200, 38,400 bits/s
Parity:	even, odd, none
Address range:	1...247
Number of devices per bus segment:	32

PROTOCOL

- MODBUS RTU

SYSTEM INTERFACE

For connection to fieldbus couplers (see system components)
Connection via bus connector fitted in the top-hat rail.
Technical data see data sheet 9498-737-50913.

ENVIRONMENTAL CONDITIONS

Protection classes

Front panel:	IP 20
Housing:	IP 20
Terminals:	IP 20

Permissible temperatures

For specified accuracy:	-10...55°C
Warm-up time:	≤ 20 minutes
Temperature effect:	≤ 0.05% / 10 K
Additional effect of CJ compensation:	≤ 0.05% / 10 K
Operating limits:	-20...60°C
For storage:	-30...70°C

Altitude

To 2000 m above sea leveln

Humidity

Max. 95%, 75% yearly average, no condensation

Shock and vibration

Vibration test Fc (DIN EN 60 068-2-6)

Frequency:	10...150 Hz
Unit in operation:	1g or 0.075 mm
Unit not in operation:	2g or 0.15 mm

Shock test Ea (DIN EN 60 068-2-27)

Shock:	15g
Duration:	11ms

Electromagnetic compatibility

Complies with EN 61 326-1 for continuous, unattended operation.

Interference radiation:

- Within the limits for Class B devices.

Immunity to interference:
Meets the test requirements for devices in industrial areas.

Evaluation criteria:

- Surge interference partly has marked effects, which decay after the interference stops.
- With high levels of surge interference on 24 VAC mains leads, it is possible that the device is reset.
- With HF interference, effects up to 50 µV can occur.

GENERAL

Housing front:

Material	Polyamid PA 6.6
Flammability class:	V0 (UL 94)

Connecting terminals:

Material:	Polyamid PA
Flammability class:	V2 (UL 94) for screw terminals V0 (UL 94) for spring-clamp terminals and bus connections

Electrical safety

CE conform
Complies with EN 61 010-1:
Over-voltage category II
Contamination degree 2
Protection class II

Electrical connections

Plug-in connector strips with choice of terminal type:

- Screw terminals for lead cross-sections from 0.2 to 2.5 mm² (AWG24-12)
- Spring-clamp terminals for lead cross-sections from 0.2 to 2.5 mm² (AWG24-12)

Mounting method

Clip-on rail mounting (35 mm top-hat rail to EN 50 022).
Locked by means of metal catch in housing base.
Close-packed mounting possible.

Mounting position: vertical

Weight:

0.18 kg

Standard accessories

– Operating notes

– Devices with 'Interface' option: bus connector for fitting into top-hat rail

CERTIFICATIONS

- Type tested to EN 14597 (replaces DIN 3440) With certified sensors applicable for:
  - Heat generating plants with outflow temperatures up to 120°C to DIN 4751
  - Hot-water plants with outflow temperatures above 110°C to DIN 4752
  - Thermal transfer plants with organic transfer media to DIN 4754
  - Oil-heated plants to DIN 4755

Table 4: BlueControl®, Versions and functions:

Functionality	Mini	Basic	Expert
parameter and configuration setting	yes	yes	yes
download: writes an engineering to the device	yes	yes	yes
online-mode / visualisation	SIM only	yes	yes
creation of user defined linearizations	yes	yes	yes
configuration of extended operation level	yes	yes	yes
upload: reads an engineering from the device	SIM only	yes	yes
basic diagnosis function	no	no	yes
saves files and engineering data	no	yes	yes
printer function	no	yes	yes
online documentation / help system	yes	yes	yes
measurement correction (calibration procedure)	yes	yes	yes
data acquisition and trend function	SIM only	yes	yes
personal assistant function	yes	yes	yes

- cULus-certification (only for device type TB45-1)
  (Type 1, indoor use)
  File: E 208286

ACCESSORIES

BlueControl® (Engineering Tool)

PC software package for configuring, parameter setting, and operating (commissioning) the TB 45. Moreover, all settings are saved and can be printed, if required.

Fig. 5: Hiding of interface parameters, only address visible

Name	Description	Visible
othr	**Other**	☑
bAud	baudrate	☐
Addr	address	☑
PrtY	parity	☐
dELY	answer delay [ms]	☐
D.Unt	display unit	☑
O2	parameter unit for O2	☑
Unit	unit	☑
dP	decimal points	☑
SEGm	display segment assignment	☑
C.dEL	modem delay [ms]	☑

Depending in version, a powerful data acquisition module with trend graphics is available.

Show/hide functions

The BlueControl® software enables any number of parameters and configuration setting to be shown/hidden.

This ensures that only permitted parameters & settings can be changed in the unit. Safety-relevant parameters are not displayed.

Simulation functions

The built-in simulation serves to test the settings.

Software requirements:
Windows 95/98/NT/2000/XP

Configuration settings that can only be made via the BlueControl® software (not via the unit's front keys):

- Customer-specific linearization
- Setting the limits for operating hours and switching cycles
- Switch-over to 60 Hz mains frequency
- Blocking operator functions, Operating Levels, and password definition
- Text inputs
- Definition of the display contents

Hardware requirements:

A special PC adapter (see 'Additional Accessories') is required for connecting to the unit.

Updates and demo software from:
www.pma-online.de

Fig. 6: Accessory parts

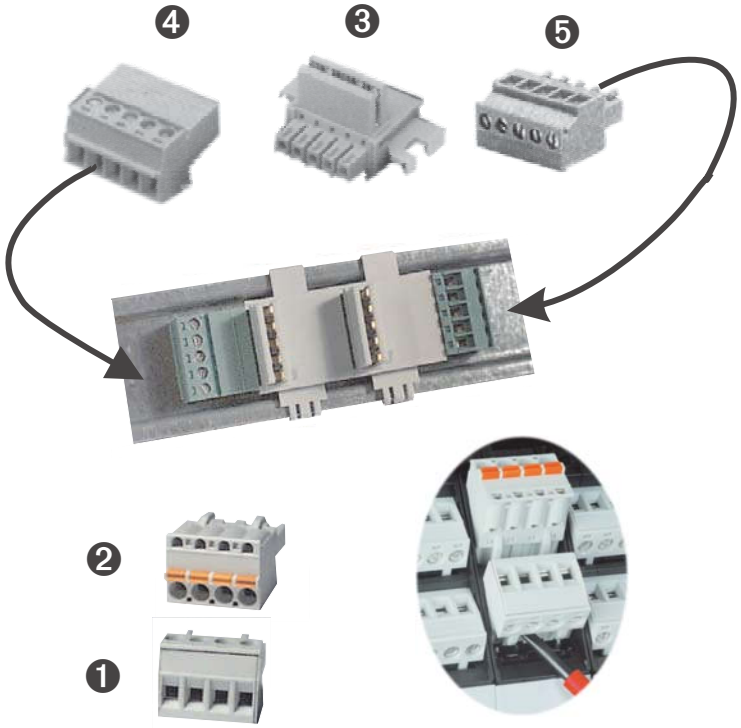

ACCESSORIES

Description		Orderl-No.
❶ **Connector set with screw terminals**	4 pcs.	**9407-998-07101**
❷ **Connector set with spring-clamp terminals**	4 pcs.	**9407-998-07111**
❸ **Bus connector for fitting in top-hat rail**	1 pcs.	**9407-998-07121**
❹ **Plug for bus connection, connections at left, horizontal cable entry**	1 pcs.	**9407-998-07131**
❺ **Plug for bus connection, connections at right, vertical cable entry**	1 pcs.	**9407-998-07141**

ADDITIONAL ACCESSORIES

Description	Order-no.
USB/TTL adapter for engineering tool	9407-998-00003
BlueControl® Mini	www.pma-online.de
BlueControl® with Basic license rail line	9407-999-12001
BlueControl® with Expert license rail line	9407-999-12011

ORDERING INFORMATION

Temperature monitor TB45-1 _ _ - _ _ 0 _ 0 - _ 00

1 universal input 1 digital input
with display and BluePort® interface

without plug-in connector terminals	**0**
with screw terminal connector	**1**
90...250V AC, 2 relays	**0**
18...30VAC/18...31VDC, 2 relays	**1**
90...250V AC, mA/V/logic + 2 relays	**2**
18...30VAC/18...31VDC, mA/V/logic +2 relays	**3**
without options	**0**
RS 485 / MODBUS - protocol	**1**
System interface (only for 24 V version)	**2**
di1 as contact input	**0**
di1 as optocoupler input	**1**
INP2 als universal input, O_2-measurement, di1 as contact input	**2**
INP2 als universal input, O_2-measurement, di1 as optocoupler input	**3**
Standard configuration	**0**
Customer-specific configuration	**9**
Standard (CE-certification)	**0**
UL, cUL	**U**
DIN 3440 / EN 14597	**D**

Temperature limiter TB 45 TB45-2 _ _ - _ _ 0 _ 0 - _ 00

1 universal input 1 digital input
with display and BluePort® interface

without plug-in connector terminals	**0**
with screw terminal connector	**1**
90...250V AC, 2 relays	**0**
18...30VAC/18...31VDC, 2 relays	**1**
90...250V AC, mA/V/logic + 2 relays	**2**
18...30VAC/18...31VDC, mA/V/logic +2 relays	**3**
without options	**0**
RS 485 / MODBUS - protocol	**1**
System interface (only for 24 V version)	**2**
di1 as contact input	**0**
di1 as optocoupler input	**1**
Standard configuration	**0**
Customer-specific configuration	**9**
DIN 3440 / EN 14597	**D**

➢ Please also order the associated documentation (as separate item):

DOCUMENTATION

Description	Order-no.
Operating instructions TB 45 (E)	**9499-040-71911**
Interface description for Modbus rail line (E)	**9499-040-72011**
Interface description PROFIBUS-DP (E)	**9499-040-77111**
Data sheet system components rail line (E)	**9498-737-50913**

SYSTEM COMPONENTS

Fieldbus coupler PROFIBUS DP	**RL40-112-00000-000**
Fieldbus coupler PROFIBUS DP, cULus certified	**RL40-112-00000-U00**
Power supply module	**RL40-119-00000-000**
Power supply module cULus certified	**RL40-119-00000-U00**

PMA

WEST INSTRUMENTS / CAL CONTROLS
The Hyde Business Park
Brighton
BN2 4JU
Tel: +44 (0) 1273 606271
Fax: +44 (0) 1273 609990
E-mail: info@westinstruments.co.uk
www.westinstruments.com

A Division of Danaher (UK Industries) Ltd, Registered in England No. 06020956
Registered Office: Danaher House, Parkway One Business Centre, Parkway Drive, Sheffield, S9 4WU

Printed in UK - Edition 06/2009 - Subject to alteration without notice - 9498 737 48413UK