0674 - THREADED SILENCER, MALE BSP PARALLEL AND METRIC



Provides significant noise reduction when air is vented from a compressed air system.

TECHNICAL SPECIFICATIONS

maximum working pressure	10 bar 1 MPa 145 psi
working temperature	-10 to 80 °C 14 to 176 °F 263 to 353 °K
body	TECHNICAL POLYMER
sub-base	TECHNICAL POLYMER
silencer	POLYTHENE

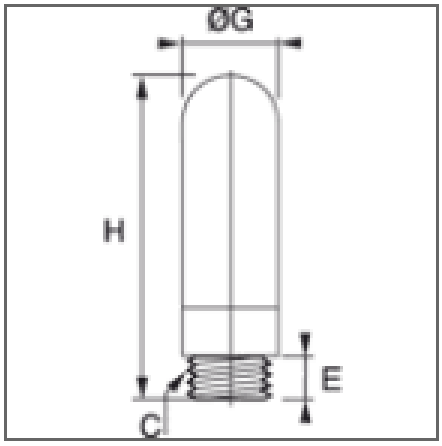

Provides significant noise reduction when air is vented from a compressed air system.

Part Nb	C	E (mm)	ØG (mm)	H (mm)	(kg)
0674 00 10	G1/8	6	12.5	34	.002
0674 00 13	G1/4	7	15.5	42.5	.003
0674 00 17	G3/8	11.5	18.5	67.5	.006
0674 00 19	M5x0,8	4	6.5	23	.003
0674 00 21	G1/2	11	23.5	78	.01
0674 00 27	G3/4	15.5	38.5	131	.035
0674 00 34	G1	19.5	49	160	.056