Heavy-Duty / Flash/Multi-Tone Sounder 442

Flash/Sounder WM 42 tne 18-30VDC RD/YE



Part No.: 442.030.55

MECHANICAL DATA	
Length	211 mm
Width	168 mm
Height	155 mm
Materials	PC/ABS
Dome colour	Yellow
Housing colour	Red
Protection category	IP66
Connection	Screw terminals
cross-sectional area minimum	0,25mm² / 24AWG
cross-sectional area maximum	1,50mm² / 16AWG
Cable entry	Screwed cable gland
Cable entry minimum	d = 8 mm
Cable entry maximum	d = 12 mm
Tension relief	Present (conforms to VDE)
Type of fixing	Wall mounting
Working temperature minimum	-25°C
Working temperature maximum	+75°C
Weight with packaging	1941 g
Product weight	1791 g

ELECTRICAL DATA	
Operating voltage	18-30V
Operating voltage type	DC
Operating voltage tolerance	+/- 0%
Rated operational voltage	24 VDC
Rated operational current	450 mA
Protection class	Protection class 2
Pollution degree	3

OPTICAL DATA	
Light source	Xenon
Light colour	Yellow
Optical signal image	Flash
Flash frequency	2 Hz
Flash output	3.5 J
Blink frequency (Hz)	2 Hz
Service life optical	50,000 h maximum

ACUSTICAL DATA

! For additional installation and mounting information, refer to the appropriate user guide at www.werma.com. This printed copy is for information only and is subject to alteration.

Heavy-Duty / Flash/Multi-Tone Sounder 442

Flash/Sounder WM 42 tne 18-30VDC RD/YE

Volume (max) at 1m distance	120,0 dB (A)
Acoustic signal image	Multi-tone
Number of tones	42 tone
Acoustic service life	5,000 h minimum

APPROVAL DATA	
Conforms with CE	Yes
WEEE	No
Conforms with ATEX-directive	No
Conforms with CCC	No
Conforms with UL	No
Conforms with FCC	No
Conforms with IC	No
EAC certificate available	Yes
Conforms with AS-I	No
ICAO Certification	No
Conforms with DNV	No
Conforms with RoHS CN	No
Conforms with VdS	No

! For additional installation and mounting information, refer to the appropriate user guide at www.werma.com. This printed copy is for information only and is subject to alteration.

Heavy-Duty / Flash/Multi-Tone Sounder 442

Flash/Sounder WM 42 tne 18-30VDC RD/YE

DRAWING

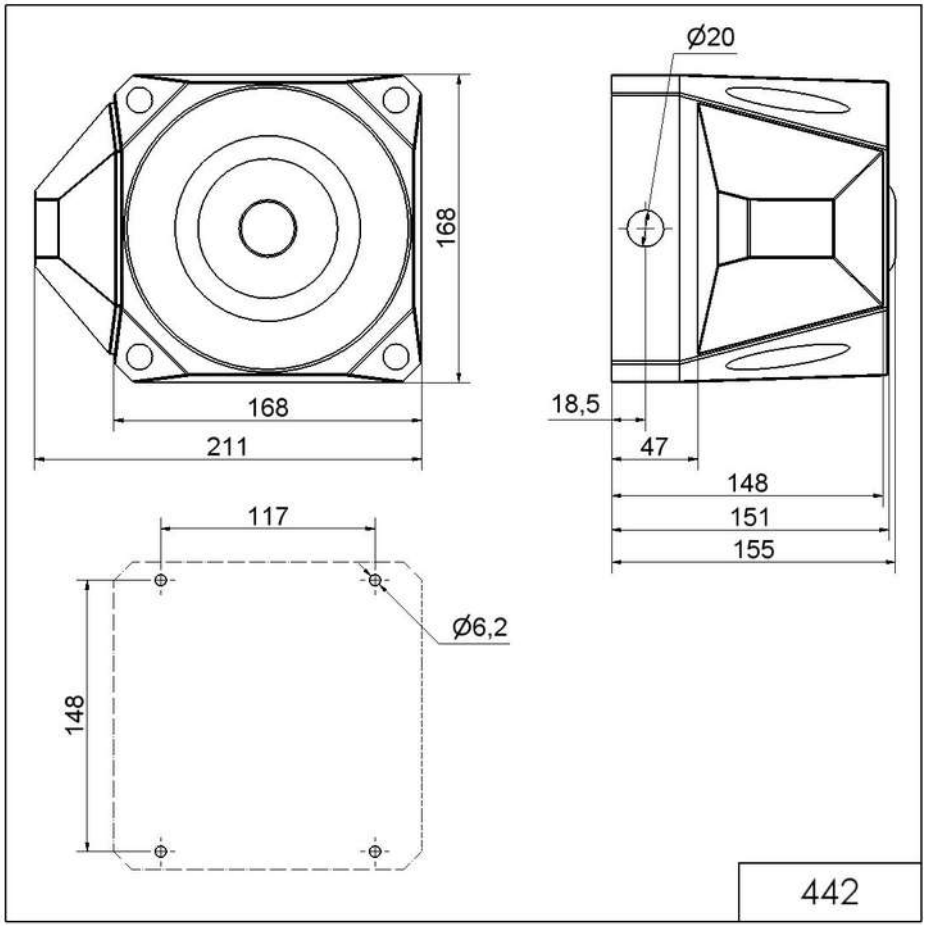

! For additional installation and mounting information, refer to the appropriate user guide at www.werma.com. This printed copy is for information only and is subject to alteration.