JUMO GmbH & Co. KG
Delivery address: Mackenrodtstraße 14
36039 Fulda, Germany
Postal address: 36035 Fulda, Germany
Phone: +49 661 6003-0
Fax: +49 661 6003-607
E-mail: mail@jumo.net
Internet: www.jumo.net

JUMO Instrument Co. Ltd.
JUMO House
Temple Bank, Riverway
Harlow, Essex CM20 2DY, UK
Phone: +44 1279 635533
Fax: +44 1279 635262
E-mail: sales@jumo.co.uk
Internet: www.jumo.co.uk

JUMO Process Control, Inc.
6733 Myers Road
East Syracuse, NY 13057, USA
Phone: 315-437-5866
1-800-554-5866
Fax: 315-437-5860
E-mail: info.us@jumo.net
Internet: www.jumousa.com

Mineral-Insulated RTD Temperature Probe According to DIN EN 60751



- **For temperatures between -50 (-200) to +600 °**
- **Flexible sheath cable with vibration-resistant measuring insert**
- **As single or double RTD temperature probe in 2-wire, 3-wire, or 4-wire circuit**
- **Quick response time**
- **Application-specific insertion length**

Due to their specific features, mineral-insulated RTD temperature probes are used in chemical plants, power plants, pipelines, engine building, test rigs, and any measuring locations requiring flexibility and simple replacement. Inside the flexible and thin-walled sheathed cable out of stainless steel, the low ohmic conductor copper wires are embedded in compressed, heat-resistant magnesium oxide.

The temperature sensor with 2-wire, 3-wire, or 4-wire technology is connected to the conductor copper wires and installed in the protection tube out of stainless steel. The protection tube and sheathed cable are welded to one another. The diameters already start at 1.9 mm.

The good thermal transfer between the protection tube and temperature sensor enables short response times ($t_{0.5}$ from 0.7 s) and excellent measuring accuracy. The vibration-resistant construction guarantees a long operating life. The flexible probe tube allows temperature measurements to be made at measuring points that are difficult to access. The smallest bending radius is 5 times the outer diameter.

The measuring insert is normally fitted with a Pt100 temperature sensor according to DIN EN 60751, class B in 2-wire circuit; versions with Pt500 or Pt1000 can be ordered as well. The connection is also available in 3-wire and 4-wire circuits.

Technical data

Terminal head	Form B, diecast aluminum, M20 × 1.5; IP65, ambient temperature -40 to +100 °C Form BUZ, diecast aluminum, M20 × 1.5; IP65, ambient temperature -40 to +100 °C Form J, diecast aluminum, M16 × 1.5, IP65, ambient temperature -40 to +100 °C Caution: reduced ambient temperature when using transmitter
Connection	Cable ends stripped bare; alternatively available with ferrules, plug-in sleeves, or multi-pole electrical connectors
Connecting cable	Silicone, ambient temperature -50 to +180 °C PTFE, ambient temperature -190 to +260 °C Metal braiding, ambient temperature -50 to +350 °C
Process connection	Thread, stainless steel 1.4571
Protection tube	Stainless steel 1.4571, Ø 1.9 mm, Ø 3 mm, and Ø 6 mm
Adapter sleeve (end closure)	As standard, the adapter sleeve (end closure) is designed up to 120 °C; it is available up to 300 °C upon request.
Measuring insert	Pt100/Pt1000 temperature sensor, DIN EN 60751, class B in 2-wire, 3-wire, or 4-wire circuit
Response times	In water with 0.4 m/s / in air with 3 m/s Ø 1.9 mm: water $t_{0.5}$ = 0.7 s, $t_{0.9}$ = 2.1 s/air $t_{0.5}$ = 7.2 s, $t_{0.9}$ = 20.5 s Ø 3.0 mm: water $t_{0.5}$ = 1.3 s, $t_{0.9}$ = 4.0 s/air $t_{0.5}$ = 13.5 s, $t_{0.9}$ = 41.0 s Ø 6.0 mm: water $t_{0.5}$ = 5.0 s, $t_{0.9}$ = 11.5 s/air $t_{0.5}$ = 37.5 s, $t_{0.9}$ = 117.5 s
Transmitter	Analog transmitter, 4 to 20 mA output, data sheet 707030 Programmable transmitter, 4 to 20 mA / 20 to 4 mA output, data sheet 707010 Programmable transmitter, 4 to 20 mA / 20 to 4 mA and HART®-interface output, data sheet 707010

JUMO GmbH & Co. KG
Delivery address: Mackenrodtstraße 14
36039 Fulda, Germany
Postal address: 36035 Fulda, Germany
Phone: +49 661 6003-0
Fax: +49 661 6003-607
E-mail: mail@jumo.net
Internet: www.jumo.net

JUMO Instrument Co. Ltd.
JUMO House
Temple Bank, Riverway
Harlow, Essex CM20 2DY, UK
Phone: +44 1279 635533
Fax: +44 1279 635262
E-mail: sales@jumo.co.uk
Internet: www.jumo.co.uk

JUMO Process Control, Inc.
6733 Myers Road
East Syracuse, NY 13057, USA
Phone: 315-437-5866
1-800-554-5866
Fax: 315-437-5860
E-mail: info.us@jumo.net
Internet: www.jumousa.com

Dimensions

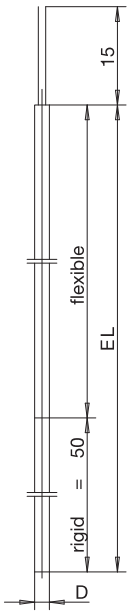

Basic type 902210/10

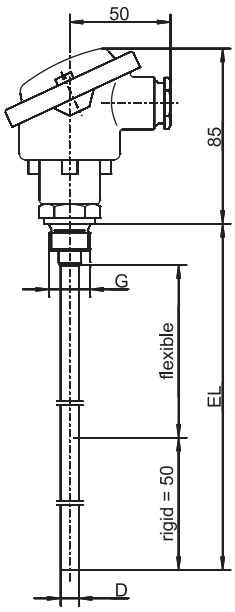

Basic type 902220/40

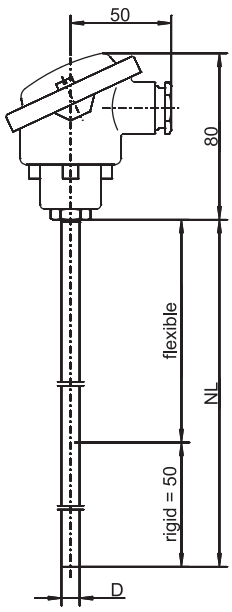

Basic type 902220/41

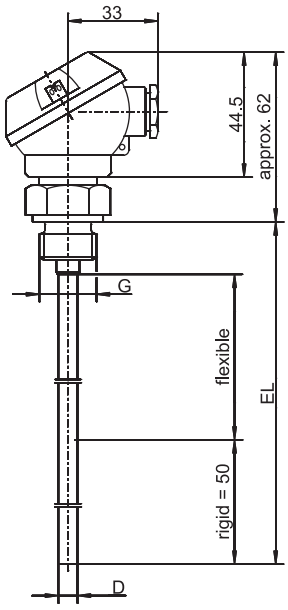

Basic type 902230/40

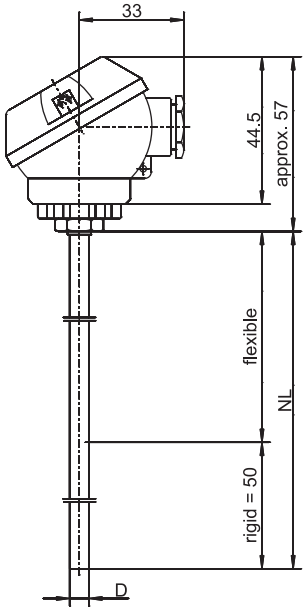

Basic type 902230/41

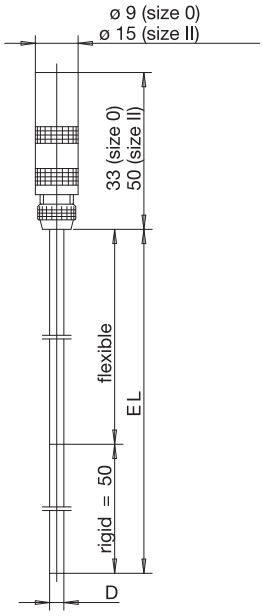

Basic type 902240/20

JUMO GmbH & Co. KG
Delivery address: Mackenrodtstraße 14
36039 Fulda, Germany
Postal address: 36035 Fulda, Germany
Phone: +49 661 6003-0
Fax: +49 661 6003-607
E-mail: mail@jumo.net
Internet: www.jumo.net

JUMO Instrument Co. Ltd.
JUMO House
Temple Bank, Riverway
Harlow, Essex CM20 2DY, UK
Phone: +44 1279 635533
Fax: +44 1279 635262
E-mail: sales@jumo.co.uk
Internet: www.jumo.co.uk

JUMO Process Control, Inc.
6733 Myers Road
East Syracuse, NY 13057, USA
Phone: 315-437-5866
1-800-554-5866
Fax: 315-437-5860
E-mail: info.us@jumo.net
Internet: www.jumousa.com

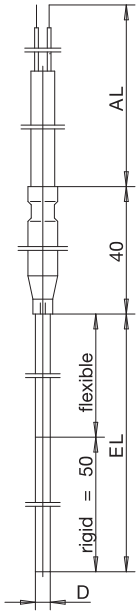

Basic type 902250/3x

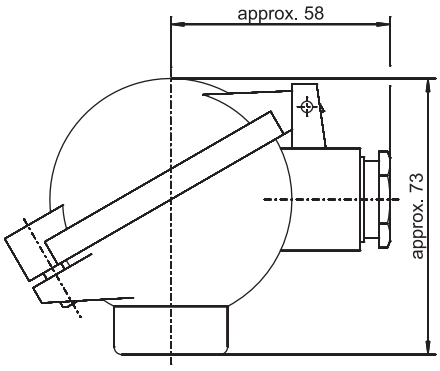

Terminal head form BUZ
extra code 320

JUMO GmbH & Co. KG
Delivery address: Mackenrodtstraße 14
36039 Fulda, Germany
Postal address: 36035 Fulda, Germany
Phone: +49 661 6003-0
Fax: +49 661 6003-607
E-mail: mail@jumo.net
Internet: www.jumo.net

JUMO Instrument Co. Ltd.
JUMO House
Temple Bank, Riverway
Harlow, Essex CM20 2DY, UK
Phone: +44 1279 635533
Fax: +44 1279 635262
E-mail: sales@jumo.co.uk
Internet: www.jumo.co.uk

JUMO Process Control, Inc.
6733 Myers Road
East Syracuse, NY 13057, USA
Phone: 315-437-5866
1-800-554-5866
Fax: 315-437-5860
E-mail: info.us@jumo.net
Internet: www.jumousa.com

Order details: mineral-insulated RTD temperature probe according to DIN EN 60751

(1) Basic type

902210/10 — Mineral-insulated RTD temperature probes with bare connection wires



902240/20 — Mineral-insulated RTD temperature probe with Lemosa coupling



			(2) Operating temperature in °C
x	x	150	-200 to +600 °C
x	x	415	-50 to +600 °C (standard)
			(3) Measuring insert
x	x	1001	1x Pt100 in 3-wire circuit
x	x	1003	1× Pt100 in 2-wire circuit
x	x	1005	1× Pt1000 in 2-wire circuit (only for operating temperature -50 to +600 °C)
x	x	1006	1× Pt1000 in 3-wire circuit (only for operating temperature -50 to +600 °C)
x	x	1011	1x Pt100 in 4-wire circuit
x		2001	2× Pt100 in 3-wire circuit (only in connection with protection tube diameter 6 mm)
x	x	2003	2× Pt100 in 2-wire circuit
			(4) Tolerance class according to DIN EN 60751
x	x	1	Class B (standard)
x	x	2	Class A
x	x	3	Class AA (1/3 DIN B)
			(5) Protection tube diameter D in mm
x	x	1.9	Ø 1.9 mm, for basic type 902240/20 incl. Lemosa-coupling size 0 (sheath cable Ø 1.5 mm)
x	x	3	Ø 3.0 mm, for basic type 902240/20 incl. Lemosa-coupling size 0
x	x	6	Ø 6.0 mm, for basic type 902240/20 incl. Lemosa-coupling size 2
			(6) Insertion length EL in mm (70 to 1000 mm)
x	x	100	100 mm
x	x	200	200 mm
x	x	300	300 mm
x	x	...	Please specify in plain text (50 mm steps)

	(1)		(2)		(3)		(4)		(5)		(6)
Order code		-		-		-		-		-	
Order example	902240/20	-	415	-	1001	-	1	-	6	-	200

JUMO GmbH & Co. KG
Delivery address: Mackenrodtstraße 14
36039 Fulda, Germany
Postal address: 36035 Fulda, Germany
Phone: +49 661 6003-0
Fax: +49 661 6003-607
E-mail: mail@jumo.net
Internet: www.jumo.net

JUMO Instrument Co. Ltd.
JUMO House
Temple Bank, Riverway
Harlow, Essex CM20 2DY, UK
Phone: +44 1279 635533
Fax: +44 1279 635262
E-mail: sales@jumo.co.uk
Internet: www.jumo.co.uk

JUMO Process Control, Inc.
6733 Myers Road
East Syracuse, NY 13057, USA
Phone: 315-437-5866
1-800-554-5866
Fax: 315-437-5860
E-mail: info.us@jumo.net
Internet: www.jumousa.com

Order details: mineral-insulated RTD temperature probe according to DIN EN 60751

(1) Basic type

		902220/40	Screw-in RTD mineral-insulated RTD temperature probe with form B terminal head
		902220/41	Push-in mineral-insulated RTD temperature probe with form B terminal head

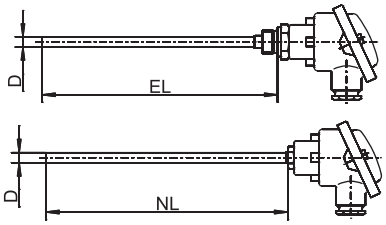

			(2) Operating temperature in °C
x	x	150	-200 to +600 °C
x	x	415	-50 to +600 °C (standard)
			(3) Measuring insert
x	x	1001	1x Pt100 in 3-wire circuit
x	x	1003	1× Pt100 in 2-wire circuit (standard for transmitters extra code 330 and 333)
x	x	1011	1× Pt100 in 4-wire circuit (standard for transmitters extra code 331 and 336)
x	x	2003	2× Pt100 in 2-wire circuit
			(4) Tolerance class according to DIN EN 60751
x	x	1	Class B (standard)
x	x	2	Class A
x	x	3	Class AA (1/3 DIN B)
			(5) Protection tube diameter D in mm
x	x	3	Ø 3 mm
x	x	6	Ø 6 mm
			(6) Insertion length EL/NL in mm (100 to 10000 mm)
x	x	100	100 mm
x	x	200	200 mm
x	x	300	300 mm
x	x	...	Please specify in plain text (50 mm steps)
			(7) Process connection
	x	000	Without
x		102	Screw connection G 1/4
x		103	Screw connection G 3/8
x		104	Screw connection G 1/2
			(8) Extra codes
x	x	000	Without
x	x	320	Terminal head form BUZ
x	x	330	1× analog transmitter, 4 to 20 mA output, data sheet 707030
x	x	331	1x programmable transmitter, 4 to 20 / 20 to 4 mA output, data sheet 707010
x	x	333	1× analog transmitter, 0 to 10 V output, data sheet 707030
x	x	336	1× programmable transmitter, 4 to 20 mA / 20 to 4 mA and HART®-interface output, data sheet 707010

	(1)		(2)		(3)		(4)		(5)		(6)		(7)		(8)	
Order code		-		-		-		-		-		-		/		, ...[a]
Order example	902220/40	-	415	-	1003	-	1	-	3	-	100	-	104	/	000	

[a] List extra codes in sequence, separated by commas.

JUMO GmbH & Co. KG
Delivery address: Mackenrodtstraße 14
36039 Fulda, Germany
Postal address: 36035 Fulda, Germany
Phone: +49 661 6003-0
Fax: +49 661 6003-607
E-mail: mail@jumo.net
Internet: www.jumo.net

JUMO Instrument Co. Ltd.
JUMO House
Temple Bank, Riverway
Harlow, Essex CM20 2DY, UK
Phone: +44 1279 635533
Fax: +44 1279 635262
E-mail: sales@jumo.co.uk
Internet: www.jumo.co.uk

JUMO Process Control, Inc.
6733 Myers Road
East Syracuse, NY 13057, USA
Phone: 315-437-5866
1-800-554-5866
Fax: 315-437-5860
E-mail: info.us@jumo.net
Internet: www.jumousa.com

Accessories

Article	Part no.
Pipe screw connection M8 x 1 stainless steel, clamping ring stainless steel for protection tube diameter D = 3 mm	00080810
Pipe screw connection M8 x 1 stainless steel, clamping ring PTFE for protection tube diameter D = 3 mm	00049709
Pipe screw connection M8 x 1 steel, clamping ring PTFE for protection tube diameter D = 4.5 mm	00049704
Pipe screw connection M8 x 1 stainless steel, clamping ring PTFE for protection tube diameter D = 4.5 mm	00049710
Pipe screw connection M10 x 1 stainless steel, clamping ring stainless steel for protection tube diameter D = 6 mm	00065416
Pipe screw connection G 1/4 stainless steel, clamping ring stainless steel for protection tube diameter D = 6 mm	00080811
Pipe screw connection G 3/8 steel, clamping ring steel for protection tube diameter D = 6 mm	00057945
Pipe screw connection G 3/8 stainless steel, clamping ring stainless steel for protection tube diameter D = 6 mm	00317966
Pipe screw connection G 1/2 stainless steel, clamping ring stainless steel for protection tube diameter D = 6 mm	00305445
Pipe screw connection 1/2-14NPT stainless steel, clamping ring stainless steel for protection tube diameter D = 6 mm	00444210
Sheet flange out of steel for protection tube diameter D = 6 mm	00065042

JUMO GmbH & Co. KG
Delivery address: Mackenrodtstraße 14
36039 Fulda, Germany
Postal address: 36035 Fulda, Germany
Phone: +49 661 6003-0
Fax: +49 661 6003-607
E-mail: mail@jumo.net
Internet: www.jumo.net

JUMO Instrument Co. Ltd.
JUMO House
Temple Bank, Riverway
Harlow, Essex CM20 2DY, UK
Phone: +44 1279 635533
Fax: +44 1279 635262
E-mail: sales@jumo.co.uk
Internet: www.jumo.co.uk

JUMO Process Control, Inc.
6733 Myers Road
East Syracuse, NY 13057, USA
Phone: 315-437-5866
1-800-554-5866
Fax: 315-437-5860
E-mail: info.us@jumo.net
Internet: www.jumousa.com

Order details: mineral-insulated RTD temperature probe according to DIN EN 60751

(1) Basic type

902230/40 Screw-in mineral-insulated RTD temperature probe with form J terminal head

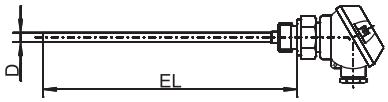

902230/41 Push-in mineral-insulated RTD temperature probe with form J terminal head

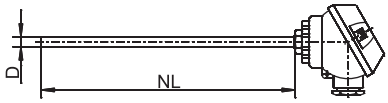

			(2) Operating temperature in °C
x	x	150	-200 to +600 °C
x	x	415	-50 to +600 °C (standard)
			(3) Measuring insert
x	x	1001	1x Pt100 in 3-wire circuit
x	x	1003	1× Pt100 in 2-wire circuit (standard for transmitters extra code 330)
x	x	1011	1x Pt100 in 4-wire circuit
x	x	2003	2× Pt100 in 2-wire circuit
			(4) Tolerance class according to DIN EN 60751
x	x	1	Class B (standard)
x	x	2	Class A
x	x	3	Class AA (1/3 DIN B)
			(5) Protection tube diameter D in mm
x	x	3	Ø 3 mm
x	x	6	Ø 6 mm
			(6) Insertion length EL/NL in mm (100 to 10000 mm)
x	x	100	100 mm
x	x	200	200 mm
x	x	300	300 mm
x	x	...	Please specify in plain text (50 mm steps)
			(7) Process connection
	x	000	Without
x		102	Screw connection G 1/4
x		104	Screw connection G 1/2
x		105	Screw connection G 3/4
			(8) Extra codes
x	x	000	Without
x	x	330	1× analog transmitter, 4 to 20 mA output, data sheet 707030

	(1)		(2)		(3)		(4)		(5)		(6)		(7)		(8)
Order code		-		-		-		-		-		-		/	
Order example	902230/40	-	415	-	1001	-	1	-	3	-	100	-	104	/	000

JUMO GmbH & Co. KG
Delivery address: Mackenrodtstraße 14
36039 Fulda, Germany
Postal address: 36035 Fulda, Germany
Phone: +49 661 6003-0
Fax: +49 661 6003-607
E-mail: mail@jumo.net
Internet: www.jumo.net

JUMO Instrument Co. Ltd.
JUMO House
Temple Bank, Riverway
Harlow, Essex CM20 2DY, UK
Phone: +44 1279 635533
Fax: +44 1279 635262
E-mail: sales@jumo.co.uk
Internet: www.jumo.co.uk

JUMO Process Control, Inc.
6733 Myers Road
East Syracuse, NY 13057, USA
Phone: 315-437-5866
1-800-554-5866
Fax: 315-437-5860
E-mail: info.us@jumo.net
Internet: www.jumousa.com

Accessories

Article	Part no.
Pipe screw connection M8 x 1 stainless steel, clamping ring stainless steel for protection tube diameter D = 3 mm	00080810
Pipe screw connection M8 x 1 stainless steel, clamping ring PTFE for protection tube diameter D = 3 mm	00049709
Pipe screw connection M8 x 1 steel, clamping ring PTFE for protection tube diameter D = 4.5 mm	00049704
Pipe screw connection M8 x 1 stainless steel, clamping ring PTFE for protection tube diameter D = 4.5 mm	00049710
Pipe screw connection M10 x 1 stainless steel, clamping ring stainless steel for protection tube diameter D = 6 mm	00065416
Pipe screw connection G 1/4 stainless steel, clamping ring stainless steel for protection tube diameter D = 6 mm	00080811
Pipe screw connection G 3/8 steel, clamping ring steel for protection tube diameter D = 6 mm	00057945
Pipe screw connection G 3/8 stainless steel, clamping ring stainless steel for protection tube diameter D = 6 mm	00317966
Pipe screw connection G 1/2 stainless steel, clamping ring stainless steel for protection tube diameter D = 6 mm	00305445
Pipe screw connection 1/2-14NPT stainless steel, clamping ring stainless steel for protection tube diameter D = 6 mm	00444210
Sheet flange out of steel for protection tube diameter D = 6 mm	00065042

JUMO GmbH & Co. KG
Delivery address: Mackenrodtstraße 14
36039 Fulda, Germany
Postal address: 36035 Fulda, Germany
Phone: +49 661 6003-0
Fax: +49 661 6003-607
E-mail: mail@jumo.net
Internet: www.jumo.net

JUMO Instrument Co. Ltd.
JUMO House
Temple Bank, Riverway
Harlow, Essex CM20 2DY, UK
Phone: +44 1279 635533
Fax: +44 1279 635262
E-mail: sales@jumo.co.uk
Internet: www.jumo.co.uk

JUMO Process Control, Inc.
6733 Myers Road
East Syracuse, NY 13057, USA
Phone: 315-437-5866
1-800-554-5866
Fax: 315-437-5860
E-mail: info.us@jumo.net
Internet: www.jumousa.com

Order details: mineral-insulated RTD temperature probe according to DIN EN 60751

(1) Basic type

902250/30	Mineral-insulated RTD temperature probe with PVC connecting cable (line temperature range 5 to +80 °C (+105 °C)
902250/32	Mineral-insulated RTD temperature probe with silicone connecting cable (line temperature range -50 to +180 °C)
902250/33	Mineral-insulated RTD temperature probe with PTFE connecting cable (line temperature range -190 to +260 °C)
902250/34	Mineral-insulated RTD temperature probe with metal-braiding connecting cable (line temperature range -50 to +350 °C)

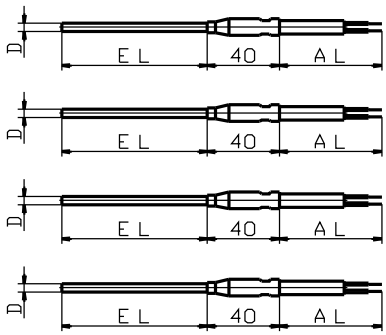

(2) Operating temperature in °C

150	-200 to +600 °C
415	-50 to +600 °C (standard)

(3) Measuring insert

1001	1× Pt100 in 3-wire circuit
1003	1× Pt100 in 2-wire circuit
1005	1× Pt1000 in 2-wire circuit (only for operating temperature -50 to +600 °C)
1006	1× Pt1000 in 3-wire circuit (only for operating temperature -50 to +600 °C)
1011	1× Pt100 in 4-wire circuit
2001	2× Pt100 in 3-wire circuit (only in connection with protection tube diameter 6 mm)
2003	2× Pt100 in 2-wire circuit

(4) Tolerance class according to DIN EN 60751

1	Class B (standard)
2	Class A
3	Class AA (1/3 DIN B)

(5) Protection tube diameter D in mm

1.9	Ø 1.9 mm (sheath cable Ø 1.5 mm)
3	Ø 3 mm
6	Ø 6 mm

(6) Insertion length EL in mm (70 to 1000 mm)

100	100 mm
200	200 mm
300	300 mm
...	Please specify in plain text (50 mm steps)

(7) Connecting cable end

11	Ferrules according to DIN 46228 part 4 (standard)
80	Multi-pole connector (enter type in plain text)

(8) Connection cable length AL in mm (500 to 500000 mm)

2500	2500 mm
...	Please specify in plain text (500 mm steps)

(9) Extra codes

000	Without
317	Shielded connecting cable

	(1)		(2)		(3)		(4)		(5)		(6)		(7)		(8)		(9)
Order code		-		-		-		-		-		-		-		/	
Order example	902250/32	-	415	-	1001	-	1	-	3	-	200	-	11	-	2500	/	000

JUMO GmbH & Co. KG
Delivery address: Mackenrodtstraße 14
36039 Fulda, Germany
Postal address: 36035 Fulda, Germany
Phone: +49 661 6003-0
Fax: +49 661 6003-607
E-mail: mail@jumo.net
Internet: www.jumo.net

JUMO Instrument Co. Ltd.
JUMO House
Temple Bank, Riverway
Harlow, Essex CM20 2DY, UK
Phone: +44 1279 635533
Fax: +44 1279 635262
E-mail: sales@jumo.co.uk
Internet: www.jumo.co.uk

JUMO Process Control, Inc.
6733 Myers Road
East Syracuse, NY 13057, USA
Phone: 315-437-5866
1-800-554-5866
Fax: 315-437-5860
E-mail: info.us@jumo.net
Internet: www.jumousa.com

Stock versions

(1)		(2)		(3)		(4)		(5)		(6)		(7)		(8)		(9)	Part no.
902250/32	-	150	-	1011	-	1	-	1.9	-	300	-	11	-	2500	/	000	00066531
902250/32	-	415	-	1003	-	1	-	3	-	100	-	11	-	2500	/	000	00068243
902250/32	-	415	-	1003	-	1	-	3	-	200	-	11	-	2500	/	000	00068244
902250/32	-	415	-	1003	-	1	-	3	-	300	-	11	-	2500	/	000	00055763
902250/32	-	415	-	1001	-	1	-	3	-	100	-	11	-	2500	/	000	00068247
902250/32	-	415	-	1001	-	1	-	3	-	300	-	11	-	2500	/	000	00055764
902250/32	-	415	-	1001	-	1	-	3	-	500	-	11	-	2500	/	000	00068248
902250/32	-	415	-	1001	-	1	-	6	-	300	-	11	-	2500	/	000	00055767
902250/32	-	415	-	1001	-	1	-	6	-	500	-	11	-	2500	/	000	00068250

Stock versions

(1)		(2)		(3)		(4)		(5)		(6)		(7)		(8)	Part no.
902230/40	-	415	-	1003	-	1	-	3	-	100	-	104	/	000	00066731
902230/40	-	415	-	1003	-	1	-	3	-	300	-	104	/	000	00057512
902230/40	-	415	-	1003	-	1	-	6	-	200	-	104	/	000	00068252
902230/40	-	415	-	1003	-	1	-	6	-	300	-	104	/	000	00055775