NV series

Compact 5-way navigation thumb controls • switching technology



DISTINCTIVE FEATURES

Tactile feedback in all directions & optional pushbutton
Compact and low profile behind panel
Shock, vibration & salt spray resistant
1 million lifecycles
Sealed to IP69K



ENVIRONMENTAL SPECIFICATIONS

- Front Panel Sealing : IP69K according to DIN 40050-9, IP67 according to IEC 60529
- Shock Resistance per IEC 60068-2-27 : 3 sinusoidal impulse 300m/s² 18ms on 3 axis
- Vibrations (random, 3 axis) per IEC 60068-2-64 : 10-350Hz
- Vibrations (sinus) per IEC 60068-2-6 : 10-200Hz / 20m/s² ; dwell period 30 minutes
- Salt Spray : 96 h per IEC 60068-2-11/KA
- Damp Heat per IEC 68-2-78 : 40 °C (104 °F) 93% HR - 10 days
- Cold and Dry Heat, Temperature Shock per IEC 68-2-14/Na : -40°C to +85°C (-40 °F to +185 °F)- 10 cycles
- Operating Temperature: -40 °C to +65 °C (-40 °F to +149 °F)

ELECTRICAL SPECIFICATIONS

- Electrical Function : 4 or 5 momentary NO
- Max. Current/Voltage Rating with Resistive Load : 50 mA 12 VDC
- Electrical Life at Full Load :
  1,000,000 cycles per direction
  1,000,000 cycles for validation
- Output :
  MOLEX 6 pin connector (Ref: 53398-0671)
  Mating connector Molex 51021-0600

The company reserves the right to change specifications without notice.

NV series

Compact 5-way navigation thumb controls • switching technology

MECHANICAL SPECIFICATIONS

- Expected Life : 1 million cycles per direction
- Angular Travel : 12°
- Pushbutton Travel : 1.5 mm
- Operating force : (customizable on request)
  Direction : 4 N ±1 N
  Validation : 11 N ±2 N
- Panel Thickness : 1 to 10 mm (.0039 in to .39 in)
- Torque : 2 Nm min. applied to nut
- Mechanical Strength : The switch can withstand a force of 100 N applied in any directions
- Mass/Weight : 17.5 g ±2 g (0.6 oz ±0.07 oz)

MATERIALS

- Sealing Gasket : Elastomeric
- Case : Brass, black chrome plated
- Actuator : ABS
- Lever : Steel
- Nut : Brass, black chrome plated
- Output wires (flying lead terminals) : AWG24, section 0.23 mm², UL 1213 (military grade)

APEM products may be recycled at end-of-life for the re-claiming of valuable metal components.

PANEL CUT-OUT

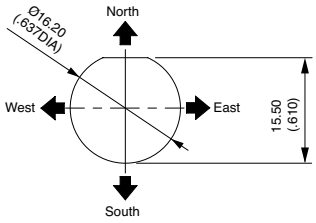

CONNECTIONS

CONNECTOR OUTPUT - REAR VIEW

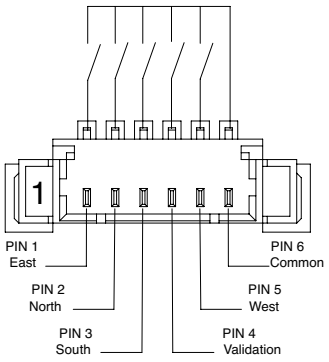

PIN 4 for validation version only

FLYING LEADS OUTPUT

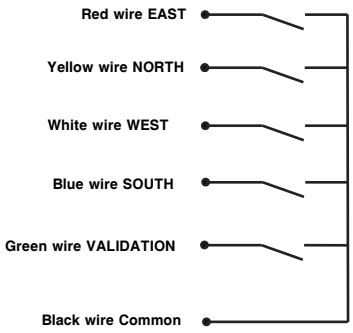

NV series

Compact 5-way navigation thumb controls • switching technology

BUILD YOUR PART NUMBER

NV	H	___	___	___	___	___
SERIES		ACTUATOR STYLES	PANEL MOUNT	CONTACT	OUTPUT	PUSHBUTTON

ACTUATOR STYLES

1	Castle
2	Conical
3	Lever

PANEL MOUNT

D	Drop-in

CONTACT

1	50 mA

OUTPUT

C	Connector
F	Flying leads 500 mm

PUSHBUTTON

0	No
1	Yes

___	___	___
LIMITER	ACTUATOR COLORS	FORCE

LIMITER

C	Cross
V	1 axis, vertical

ACTUATOR COLORS

P1	Blue
P2	Black
P3	Green
P4	Grey
P5	Yellow
P6	Red
P7	White
P9	Orange
PM	Desert tan

FORCE

S	Standard

ABOUT THIS SERIES

Notice : please note that not all combinations of above numbers are available. Refer to the following pages for further information.

Mounting accessories : Standard hardware supplied : 1 hex nut 19 mm across flats

NV series

Compact 5-way navigation thumb controls • switching technology

4 DIRECTIONS



Connector output

NVH•D1C0

Flying lead output

NVH•D1F0

FOR DIRECTION AVAILABLE

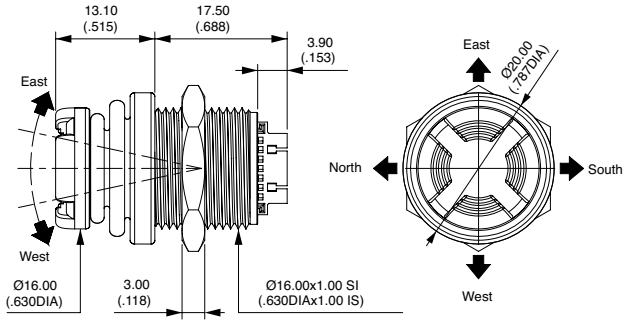

4 DIRECTIONS + PUSHBUTTON



Connector output

NVH•D1C1

Flying lead output

NVH•D1F1

FOR DIRECTION AVAILABLE

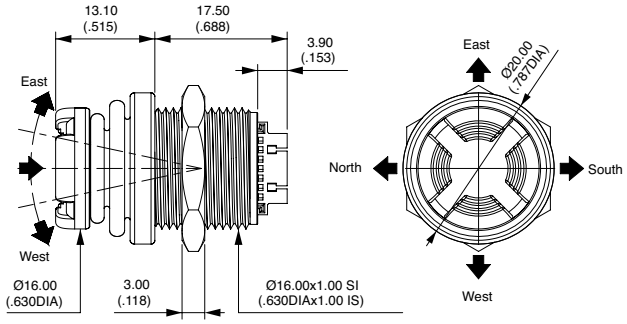

ACTUATOR STYLE

In the above part numbers, replace • with one the following codes.

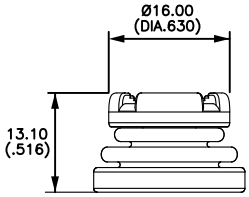

1 Castle

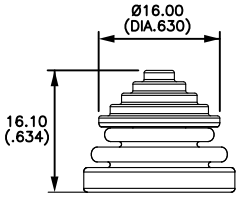

2 Conical

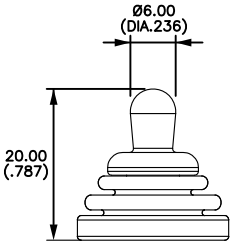

3 Lever