NANUK™

PROFESSIONAL PROTECTIVE CASES



988

NEW

3 POSSIBLE CONFIGURATIONS



nanuk.com

NANUK™
PROFESSIONAL PROTECTIVE CASES

988



Long, deep, rugged, and tough, **NANUK** 988 will protect and mobilize loads of gear with room to spare. It's built to go fast with stainless steel ball-bearing wheels and three spring-loaded handles that make it the perfect premium waterproof protective case to go anywhere.

Waterproof and dustproof, it's built so it can be thrown in the back of a pick-up, stacked on a pallet, taken to the set or the range with confidence. Designed with a long and deep interior of 41.75" x 13.63"x 12.5" (1060mm x 346mm x 318mm), it fits lighting equipment, tripods, camera equipment, telescopes, bunker gear, rifles, chainsaws, industrial equipment, and more.

The 988 is part of our Configurable Series. The base model equipped with three (3) ultra-strong handles and two (2) strong polyurethane large wheels with stainless steel ball bearings is for any terrain. If your needs change, the wheel assemblies on the 988 are removable and can be replaced by our custom corner caps. The 988T and 988M are lighter with no wheels to facilitate team carry deployment and to meet agency restrictions against one-person carry. The 988T and 988M also offer a lower profile for efficient warehousing and tight spaces. Both are available as custom orders.

Like all **NANUK** waterproof protective cases, the 988 is made of NK7 resin and equipped with six (6) of our legendary PowerClaw latches. The 988 is indestructible and will never open accidentally. Molded with deeper ribs and taller feet, it's highly stackable.

The 988 comes with our lifetime warranty, your assurance that we build cases to protect your most valuable gear for life. Additionally, a polycarbonate ID Window is available as an option. It attaches quickly and easily to the front of the 988. Other options include TSA Approved Latches as a retrofit kit, TSA Approved Padlocks, Panel Installation Kit, Multi-Layer Solid Foam, and Padded Dividers.

SPECIFICATIONS

Interior dimensions	L41.75" x W13.63" x H12.50" L1060mm x W346mm x H318mm
Exterior dimensions	L44.88" x W16.25" x H13.56" L1140mm x W413mm x H344mm
Weight	10.9 kg | 24.0 lbs
Lid depth	2.75" | 70mm
Base depth	9.75" | 248mm
Max buoyancy	284 lbs
Temperature range	Min -67°F (-55°C) Max 158°F (70°C)
Airline cabin carry-on	No
Watertight	Yes - IP67
Warranty	Limited lifetime guarantee

NANUK™
PROFESSIONAL PROTECTIVE CASES

3 POSSIBLE CONFIGURATIONS



988

Two (2) polyurethane wheels
Team-carry handles

988T

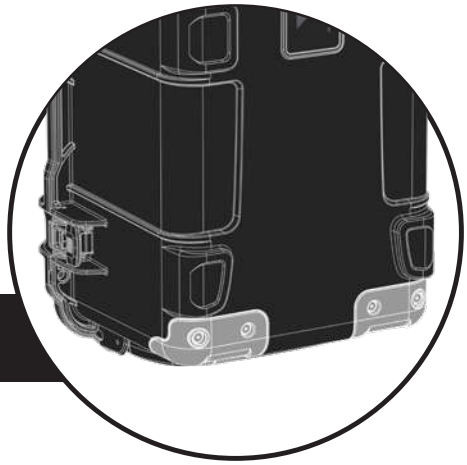

2x Corner Cap
Team-carry handles

CUSTOM ORDER
MOQ APPLIES

988M

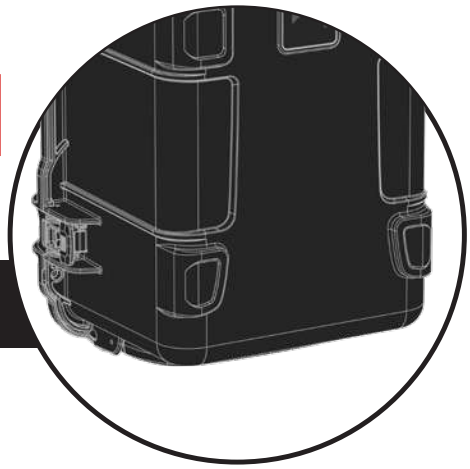

Team-carry handles

CUSTOM ORDER
MOQ APPLIES

988 Features	988	988T	988M
3 soft grip strong handles	■	■	■
2 large and strong polyurethane wheels	■		
2 automatic pressure equalization valves	■	■	■
Lower corner caps	■	■	
Stackable	■	■	■
In stock	■	Special order	Special order

NANUK™
PROFESSIONAL PROTECTIVE CASES

Long, Deep, Rugged & Tough



PERFECT CASE FOR:

- Pro photo-video equipment
- Lighting equipment
- Tripods
- Firearms
- Hunting gear
- Telescopes
- Power tools
- Chainsaws
- Military gear
- Turnout gear
- Oxygen tanks
- Sports equipment
- Measurement equipment
- Industrial tools
- Truck bed/utility box
- And much more



STOCK AND CUSTOM **PROTECTIVE INTERIOR INSERTS**

ACCESSORIES



Set of 2 bottom corner caps



Multilayer Solid Foam



Panel Installation Kit



TSA Approved Latches



Padded Divider (Late Availability)



ID Window



TSA Approved Padlock



NANUK™
PROFESSIONAL PROTECTIVE CASES

988 FEATURES



3 SOFT GRIP
STRONG HANDLES



2 LARGE AND STRONG
POLYRETHANE WHEELS



2 AUTOMATIC PRESSURE
EQUALIZATION VALVES



6 POWERCLAW
LATCHES



DEEPER RIBS
AND TALLER FEET



ID WINDOW
COMPATIBLE (OPTIONAL)

NANUK™
PROFESSIONAL PROTECTIVE CASES

CERTIFICATIONS

- DEF-STAN 81-41
- IP6X INGRESS PROTECTION - DUSTPROOF
- IPX7 INGRESS PROTECTION - WATERPROOF
- MIL-C-4150J - 26 DROPS WITH 130 LB | 59 KG AT+60°C and -20°C (X 26)
- MIL-STD-810G - IMMERSION (1 meter (3.28 ft))
- MIL-STD-810G - FUNGUS TEST
- ATA SPECIFICATION 300 - CATEGORY 1 IMPACT

MATERIALS

- Case Shell – NK-7 High Impact Polypropylene
- Latches – Nylon 66
- Handles – NK-7 High Impact Polypropylene | TPE
- Purge Valve – Nylon 66 | Gore Membrane | Silicone Washers
- Pins/Hardware – 304 Stainless Steel
- Gasket – EPDM
- Wheels – Polyurethane | Polycarbonate

North America Headquarters

Plasticase Inc./NANUK
1059 Boulevard des Entreprises Ouest
Terrebonne, Québec, Canada J6Y 1V2
T: 450.628.1006 | 1.800.783.6883
E: info@nanuk.com
www.nanukcases.ca

Plasticase USA Inc./NANUK

2915 Ogletown Road
Newark, Delaware, 19713 USA
T: 450.628.1006 | 1.800.783.6883
E: info@nanuk.com
www.nanuk.com

NANUK EU B.V. NANUK Europe

Burg. J.G. Legroweg 96
9761TD Eelde,
The Netherlands
T: +31 50 3128694
E: info@nanuk.eu
www.nanuk.eu

Visit our website for the complete product lineup.

MADE IN CANADA
FABRIQUÉ AU CANADA

Copyright © 2022 Plasticase inc. All rights reserved. #22-01EN