Your Expert Partner for **Human Machine Interfaces**

# Actuator

Distribution by
Rs-online

704.117.018

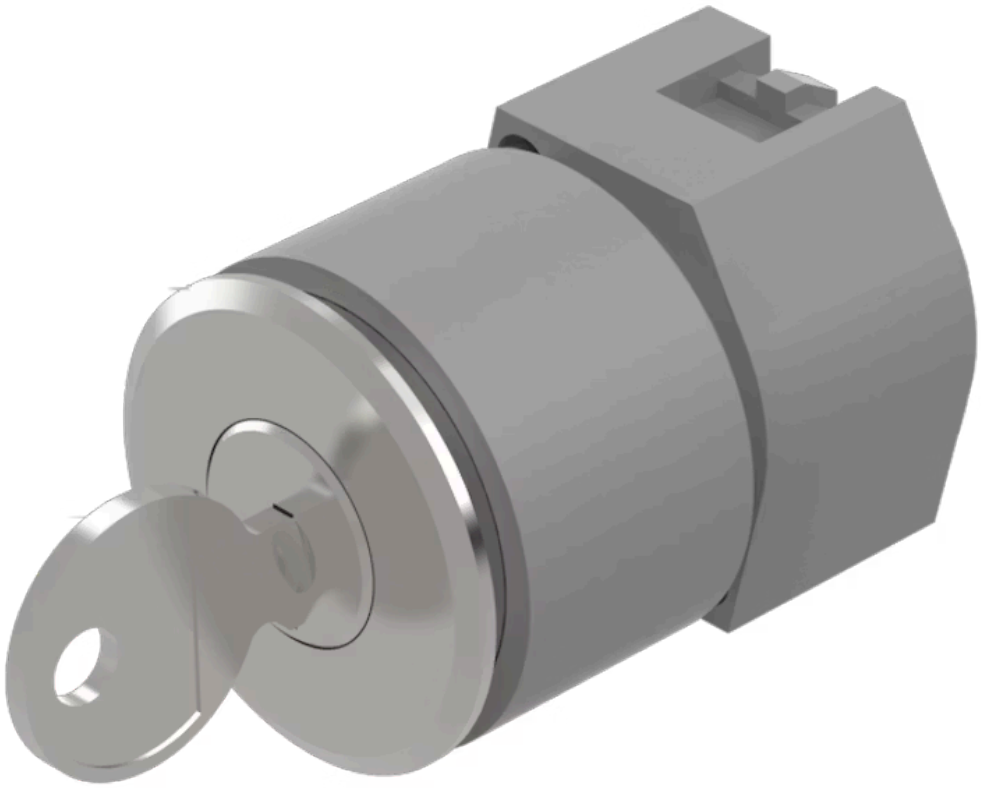

https://rs-online.eao.com/component/704.117.0...

Your product:



# 704.117.018
# Actuator

## FRONT

| | |
|---|---|
| **Front dimension:** | Ø 35 mm |
| **Front form:** | Round |
| **Front bezel colour:** | Nature |
| **Front bezel material:** | Aluminium |

## MOUNTING

| | |
|---|---|
| **Design:** | Flush |
| **Mounting cut-out:** | Ø 30.5 mm |
| **Mounting type:** | Panel mounting |

## ELECTRICAL CHARACTERISTICS

| | |
|---|---|
| **Standards:** | The switches comply with the “Standards for low-voltage switching devices” DIN EN 60947-1 |

## MECHANICAL CHARACTERISTICS

| | |
|---|---|
| **Switching action:** | Maintained (a) - Rest - Momentary |
| **Switching positions:** | 3 positions |
| **Switching angle:** | 42° left / 42° right |
| **Mechanical lifetime:** | ≤50 000 cycles of operation |
| **Weight:** | 0.101 kg |

## AMBIENT CONDITION

| | |
|---|---|
| **IP Protection:** | IP65 front side |

| | |
|---|---|
| **Operating temperature:** | – 40 °C ... + 55 °C |
| **Storage temperature:** | – 40 °C ... + 85 °C |

## CERTIFICATE

| | |
|---|---|
| **REACH:** | REACH compliant |
| **RoHS:** | RoHS compliant |

## OTHER

| | |
|---|---|
| **Short Description:** | Actuator, Ø 30.5 mm, Ø 35 mm, Round, Nature, Aluminium, Maintained (a) - Rest - Momentary |
| **Hints:** | The standard lock Ronis 251<br>Further lock numbers on request<br>Max. 3 switching elements can be clipped on |
| **max. number of switching elements:** | 3 |

**Switching positions:**

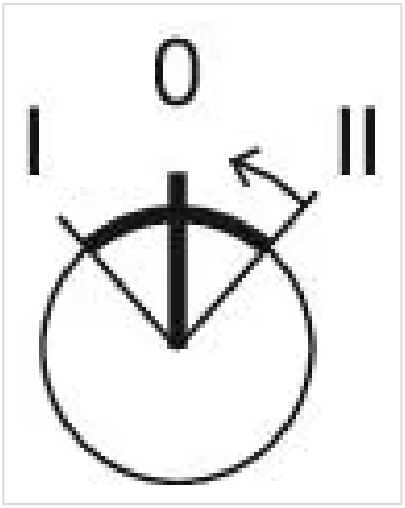


**Wiring diagrams:**



**Mounting cut-outs:**

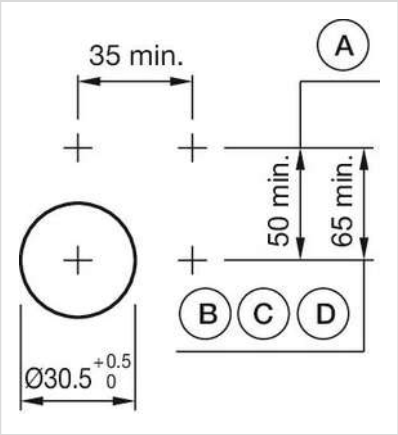


A = Screw terminal
B = Push-in terminal (PIT)
C = Plug-in terminal 6.3 mm x 0.8 mm
D = Double plug-in terminal 6.3 mm x 0.8 mm

**Dimension drawings:**

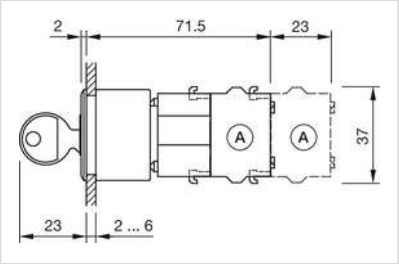


A = Screw terminal