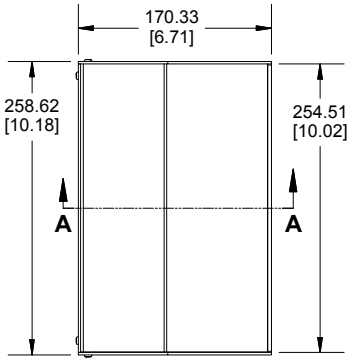

TOP VIEW

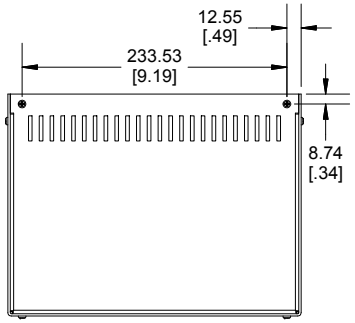

BACK VIEW

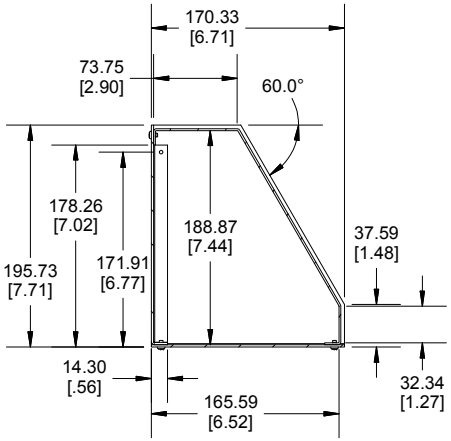

SECTION A-A
SIDE VIEW

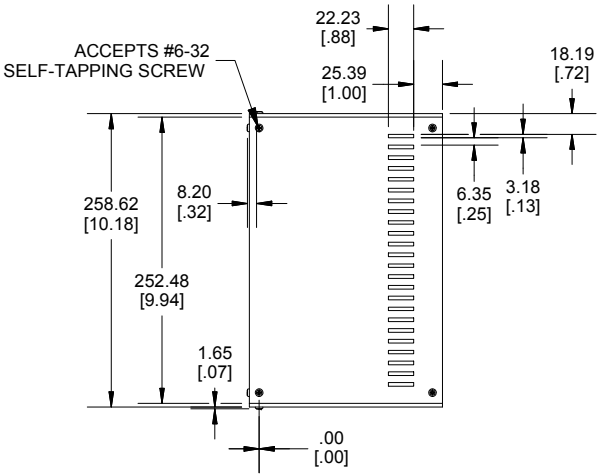

BOTTOM VIEW

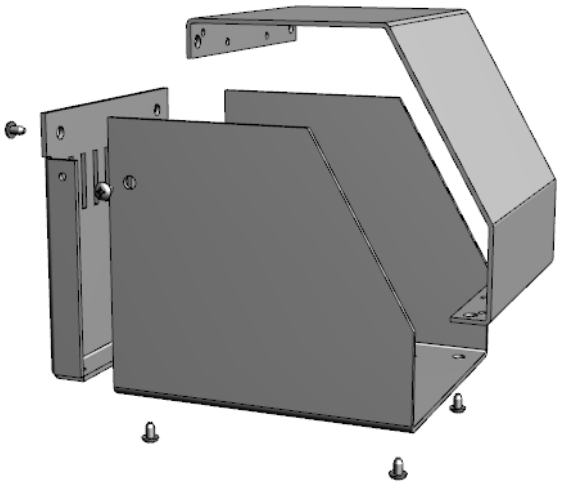

Enclosures can be Factory Modified (Milling, Drilling, Printing etc.)
Contact Factory mjm@hammondmfg.com for quotes
Solid models of this enclosure available in STEP or IGES.
(Part number and text placement/orientation on our products are subject to change, we do not recommend using them as a locating reference for modification purposes)

NOTE
Purchased assembly includes Bottom, Top, Back, 8 cover screws and 4 rubber feet. Bottom and Back made from 12 Gague Aluminum, Top made from .0645" Aluminum.
Recommended Cover screw torque -- 13-14 lbf-in (150-160 cN-m)

SCEM251619WH	
ENCLOSURE	
Aluminum painted Blue / Grey	SCEM251619WH
ACCESSORIES	
#6-32 x 1/4" Self-Tapping screw (8 pkg)	1421J8

Dimensions:
mm
[inches]

HAMMOND MANUFACTURING®

SCEM251619WH

www.hammondmfg.com