Dimensions

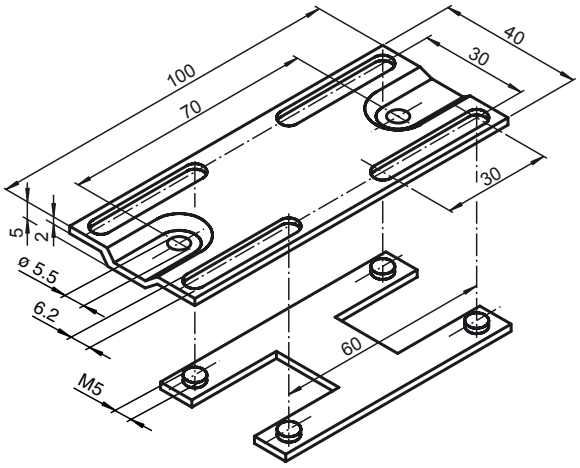

Technical data

Mechanical specifications

Material	aluminium
Dimensions	100 mm x 40 mm

Model Number

MH 04-2057B

Mounting aid for VariKont and +U1+

Features

- Suitable for VariKont and +U1+ sensors
- Fixing screws for VariKont included in delivery

Function

The mounting bracket type 04-2057 simplifies the adjustment of sensors of the model line VariKont® and the series +U1+ according to DIN 43694, EN 50041.
It permits the fitted and wired sensor to be repositioned by up to 30 mm. By loosening the M4 x 16 sensor mounting screws, the sensor can be easily moved backwards and forwards. Thus, the switch point can be set exactly.
The screws are then tightened to secure the sensor in position.
The material of the setting slide is corrosion-resistant aluminium.
Fixing screws for VariKont are included with delivery.

Release date: 2008-11-25 12:27 Date of issue: 2008-11-25 000059_ENG.xml

Subject to reasonable modifications due to technical advances. Copyright Pepperl+Fuchs, Printed in Germany