# Single-phase CT current transformers

**Cat. No(s): 4 121 01/02/03/04/05/06/07/12/14/16/17/19/23/24/25/26/31/32/33/36/38/39/42/46/47/49/50/51/52/53/54**

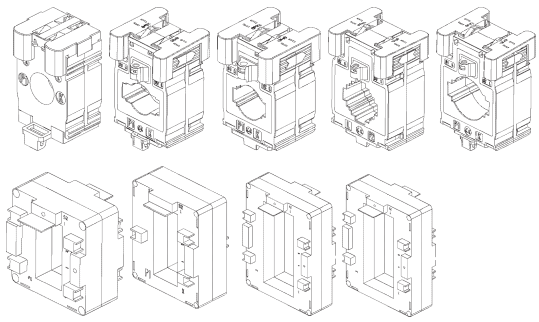

CONTENTS Page


1. Description, use .....1
2. Range, Cat. No. equivalence table .....1
3. Dimensions.....1
4. Positioning - Connection.....2
5. General characteristics.....4
6. Compliance and approvals.....5


## 1. DESCRIPTION, USE

Closed-type single-phase current transformers.
Used with ammeters, electricity meters or measurement control units.
For mounting on copper or aluminium cables or busbars.
Provide a 5 A current at the secondary, proportional to the primary current
For fixing on a plate, on EN 60715 symmetrical rail or busbar
Secondary connected by terminals or lugs
Accuracy class 0.5 – 1 – 3

## 2. RANGE, CAT. NO. EQUIVALENCE TABLE

| Cat. No. | Rating (A) | Equivalence to old Cat. Nos. |
|---|---|---|
| 4 121 01 | 50 | 004631 |
| 4 121 02 | 75 | - |
| 4 121 03 | 100 | 004634 |
| 4 121 04 | 125 | - |
| 4 121 05 | 160 | - |
| 4 121 06 | 200 | 004636 |
| 4 121 07 | 250 | - |
| 4 121 16 | 250 | - |
| 4 121 17 | 400 | - |
| 4 121 19 | 700 | - |
| 4 121 12 | 400 | - |
| 4 121 14 | 600 | - |
| 4 121 23 | 250 | - |
| 4 121 24 | 300 | - |
| 4 121 25 | 400 | 004638 |
| 4 121 26 | 600 | - |
| 4 121 31 | 700 | - |
| 4 121 32 | 800 | - |
| 4 121 33 | 1000 | - |
| 4 121 36 | 600 | 004776 |
| 4 121 38 | 800 | 004777 |
| 4 121 39 | 1000 | 004778 |
| 4 121 42 | 1250 | 004779 |
| 4 121 46 | 1600 | - |
| 4 121 47 | 2000 | 004646 |
| 4 121 49 | 3200 | - |
| 4 121 50 | 1600 | - |
| 4 121 51 | 2000 | - |
| 4 121 52 | 2500 | 004780 |
| 4 121 53 | 3200 | - |
| 4 121 54 | 4000 | 004648 |

## 3. DIMENSIONS

**Cat. Nos. 4 121 01/02/03/04/05/06/07**

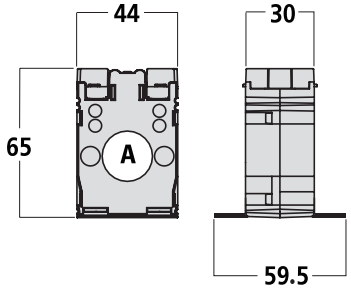


**Cat. Nos. 4 121 16/17/19**

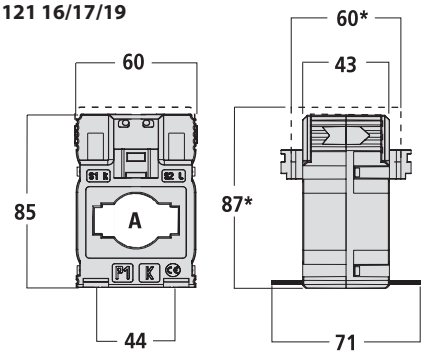


**Cat. Nos. 4 121 12/14**

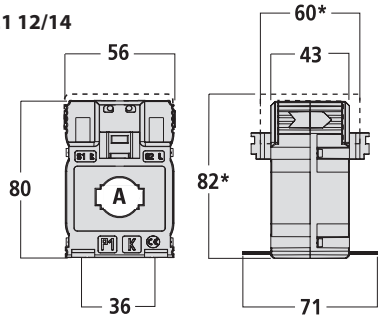

**Cat. Nos. 4 121 23/24/25/26**

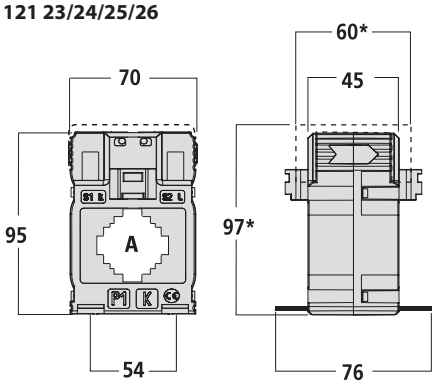


**Cat. Nos. 4 121 31/32/33**

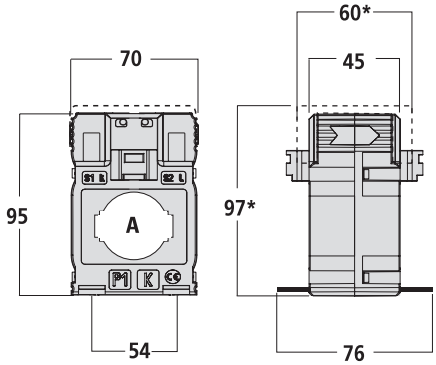


**Cat. Nos. 4 121 36/38/39**

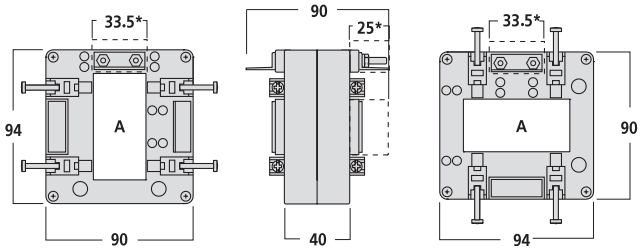


**Cat. No. 4 121 42**

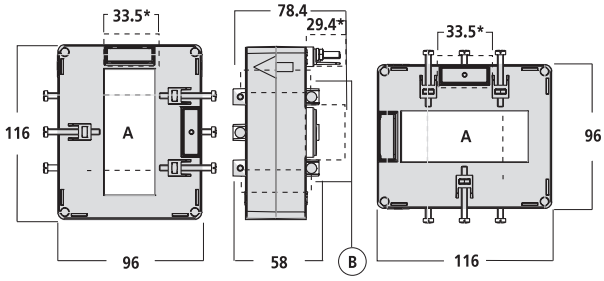


**Cat. Nos. 4 121 46/47/49**

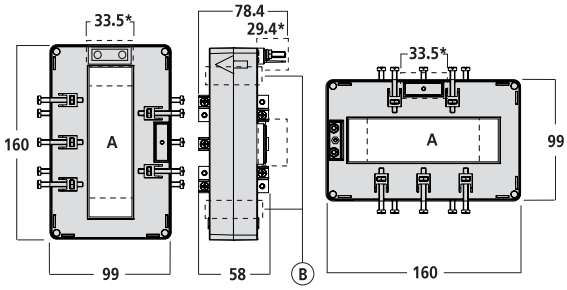


**Cat. Nos. 4 121 50/51/52/53/54**

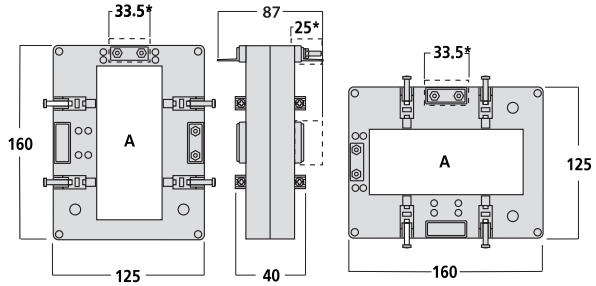


## 4. POSITIONING - CONNECTION

### 4.1 Conductor dimensions

The current transformer rating is selected according to the conductor dimensions, but also according to the maximum prospective current in the circuit to be measured. In order to minimise measurement errors, the rating must be selected as close as possible to this value.
CTs cannot be used with a DC supply.

**Cat. Nos. 4 121 01/02/03/04/05/06/07 for cable and busbar:**

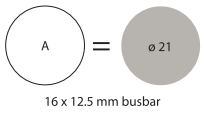


**Cat. Nos. 4 121 16/17/19 for cable and busbar:**




**Cat. Nos. 4 121 12/14 for cable and busbar:**




**Cat. Nos. 4 121 23/24/25/26 for cable and busbar:**




**Cat. Nos. 4 121 31/32/33 for cable and busbar:**




**Cat. Nos. 4 121 36/38/39 for busbar:**

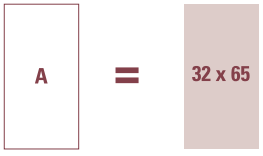


**Cat. No. 4 121 42 for busbar:**

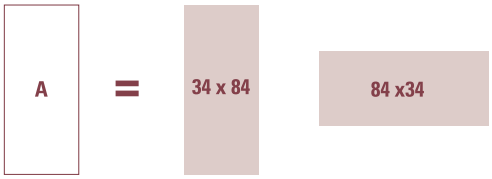

**Cat. Nos. 4 121 46/47/49 for busbar:**

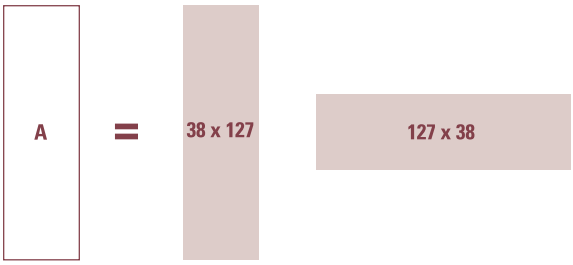


**Cat. Nos. 4 121 50/51/52/53/54 for busbar:**

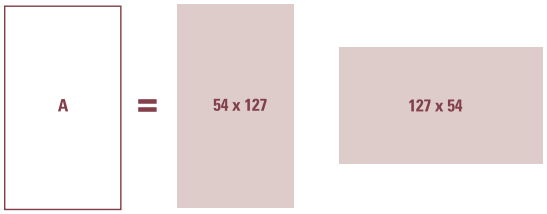


### 4.2 Fixing type

Current transformers are available with several types of fixing. CTs taking cables can be clipped onto DIN rails. Others, which take busbars, should be fixed in place by tightening the dedicated screw. They can also be fixed on a plate using the fixing points on the bottom.

**Fixing with screws supplied** for Cat. Nos. 4 121 01/02/03/04/05/06/07/16/17/19/12/14/23/24/25/26/31/32/33

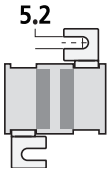


**Fixing on EN 60715 rail (plate supplied)** for Cat. Nos. 4 121 01/02/03/04/05/06/0716/17/19/12/14/23/24/25/26/31/32/33

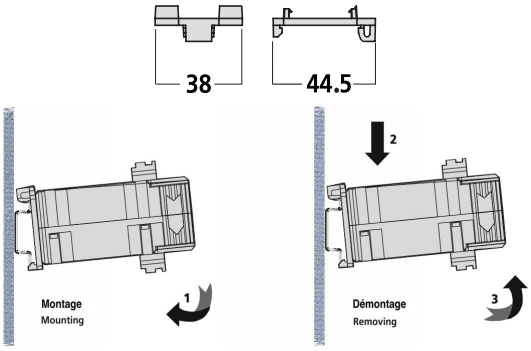


**Fixing on vertical or horizontal busbar** for Cat. Nos. 4 121 36/38/39/42/46/47/49/50/51/52/53/54

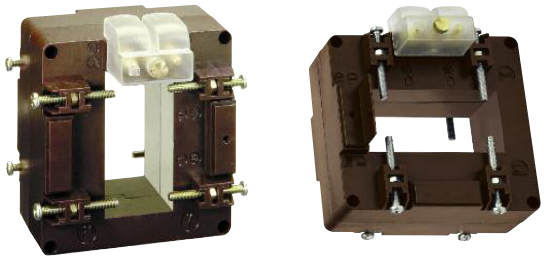

### 4.3 Connection diagram

The secondary terminals (S1 and S2) should be connected to the corresponding inputs on the measuring device (meter or control unit). The value sent to the meter or measurement control unit depends on the direction of mounting on the busbar or cable. To avoid errors, it is essential to make sure that the CT is in the right position. The current flow must enter at P1 (coming from the source) and exit at P2 (going towards the load).

**Cat. Nos. 4 121 01/02/03/04/05/06/07/16/17/19/12/14/23/24/25/26/31/32/33**

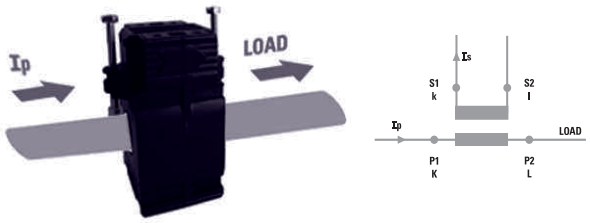


**Cat. Nos. 4 121 36/38/39/42/46/47/49/50/51/52/53/54**

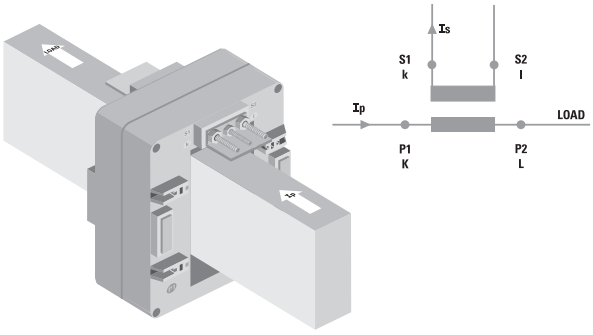


### 4.4 Integration guide for HX$^3$ and VX$^3$ connection kits

| Kit Cat. No. | CT Cat. No. |
|---|---|
| HX$^3$/VX$^3$ prefabricated connection kits in an XL$^3$ 400 enclosure | |
| 4 044 40 | 4 121 05 |
| 4 044 55 | 4 121 07 |
| 4 044 87 | |
| HX$^3$/VX$^3$ prefabricated connection kits in an XL$^3$ 800/4000 enclosure | |
| 4 044 63 | 4 121 19 |
| 4 044 64 | 4 121 33 |
| 4 044 65 | 4 121 19 |
| 4 044 72 | 4 121 38 |
| 4 044 74 | 4 121 07 |
| 4 044 75 | 4 121 19 |
| 4 044 76 | 4 121 33 |
| 4 044 86 | 4 121 17 |
| HX$^3$/VX$^3$ prefabricated connection kits in an XL$^3$ 4000 enclosure | |
| 4 045 30 | 4 121 38 |
| 4 045 31 | |
| 4 045 40 | 4 121 05 |
| 4 045 41 | 4 121 07 |
| 4 045 43 | 4 121 25 |
| 4 045 50 | 4 121 05 |
| 4 045 51 | 4 121 07 |
| 4 045 53 | 4 121 25 |
| 4 045 60 | 4 121 05 |

| Kit Cat. No. | CT Cat. No. |
|---|---|
| HX$^3$/VX$^3$ prefabricated connection kits in an XL$^3$ 4000 enclosure | |
| 4 044 61 | 4 121 07 |
| 4 044 62 | 4 121 19 |
| 4 044 63 | 4 121 25 |
| VX$^3$ connection kits for transfer in an XL$^3$ 4000 enclosure | |
| 4 043 80 | 4 121 46 |
| 4 043 81 | |
| 4 043 82 | |
| 4 043 83 | |
| 4 043 84 | |
| 4,043 64 | 4 121 47 |
| 4,043 65 | |
| 4,043 66 | |
| 4,043 67 | |
| 4,043 68 | 4 121 46 |
| 4,043 69 | |
| 4,043 70 | |
| 4,043 71 | |
| 4,043 60 | 4 121 49 |
| 4,043 61 | 4 121 54 |
| 4,043 62 | 4 121 49 |
| 4,043 63 | 4 121 54 |
| IS 233/333 VX$^3$ bases for devices | |
| 4 046 20/21/31<br>4 046 40/41/51 | 4 121 05 |
| 4 046 22/23/33<br>4 046 42/43/53 | 4 121 07 |
| 4 046 26/27/36/37<br>4 046 46/47/56/57 | 4 121 32 |
| 4 046 90 | 4 121 42 |
| 4 046 92 | |

## 5. GENERAL CHARACTERISTICS

### 5.1 Technical characteristics

Protection class (EN 60529):

- Case: IP20
- Terminals: IP00 (IP20 with sealable terminal shield)

96 hour salt spray resistance (red rust)

Rated frequency: 50 Hz

Operating frequency: 47 toto 63 Hz

Continuous rated thermal current in accordance with standard EN 60044-1

Rated thermal short-circuit current: $I_{th} < 60\ I_n$

Rated dynamic current: $I_{dyn} = 2.5\ I_{th}$

Safety factor (SF): ≤ 5

Rated secondary current: $I_{sn} = 5$ A

Rated burden: see table 1

Accuracy class: see table 1

Maximum dissipated power:

4 121 01/02/03/04/05/06/07: ≤ 3 W

4 121 16/17/19: ≤ 11.5 W

4 121 12/14: ≤ 7 W

4 121 23/24/25/26: ≤ 9 W

4 121 31/32/33: ≤ 10.5 W

4 121 36/38/39: ≤ 20 W

4 121 42: ≤ 19 W

4 121 46/47/49/50/51/52/53/54: ≤ 23 W

**Table 1**

| Cat. No. | Rating (A) | Cl 0.5/VA | Cl 1/VA | Cl 3/VA |
|---|---|---|---|---|
| 4 121 01 | 50/5 A | - | 1 | 1.5 |
| 4 121 02 | 75/5 A | - | 1.5 | 2.5 |
| 4 121 03 | 100/5 A | 1.5 | 2.5 | 3.5 |
| 4 121 04 | 125/5 A | 2 | 3.5 | 4 |
| 4 121 05 | 160/5 A | 3 | 4 | 5 |
| 4 121 06 | 200/5 A | 4 | 5.5 | 6 |
| 4 121 07 | 250/5 A | 5 | 6 | 7 |
| 4 121 16 | 250/5 A | 3 | 4 | - |
| 4 121 17 | 400/5 A | 6 | 8 | - |
| 4 121 19 | 700/5 A | 8 | 10 | - |
| 4 121 12 | 400/5 A | 10 | 12 | - |
| 4 121 14 | 600/5 A | 15 | 20 | - |
| 4 121 23 | 250/5 A | 3 | 5 | - |
| 4 121 24 | 300/5 A | 5 | 8 | - |
| 4 121 25 | 400/5 A | 8 | 10 | - |
| 4 121 26 | 600/5 A | 12 | 15 | - |
| 4 121 31 | 700/5 A | 8 | 10 | - |
| 4 121 32 | 800/5 A | 8 | 12 | - |
| 4 121 33 | 1000/5 A | 10 | 12 | - |
| 4 121 36 | 600/5 A | 8 | 12 | - |
| 4 121 38 | 800/5 A | 12 | 15 | - |
| 4 121 39 | 1000/5 A | 15 | 20 | - |
| 4 121 42 | 1250/5 A | 12 | 15 | - |
| 4 121 46 | 1600/5 A | 10 | 15 | - |
| 4 121 47 | 2000/5 A | 15 | 20 | - |
| 4 121 49 | 3200/5 A | 25 | 30 | - |
| 4 121 50 | 1600/5 A | 20 | 30 | - |
| 4 121 51 | 2000/5 A | 25 | 30 | - |
| 4 121 52 | 2500/5 A | 30 | 50 | - |
| 4 121 53 | 3200/5 A | 30 | 50 | - |
| 4 121 54 | 4000/5 A | 30 | 50 | - |

### 5.2 Insulation characteristics

Air-insulated dry-type transformer

Maximum insulation voltage: Um = 0.72 kV rms value

Rated insulation voltage level: 3 kV rms value 50 Hz/1 min

Insulation class (EN 60044-1): B

### 5.3 Usage conditions

Non-exposed installation (EN 60044-1)

Reference temperature: 23°C ± 1°C

Usage temperature: -25 to 50°C **except for 4 121 36/38/39/42/46/47/49/50/51/52/53/54**: -25 to 50°C (Ipn < 1000 A); -25 to 40°C (Ipn ≥ 1000 A)

Daily average temperature: ≤ 30°C

Storage temperature: -40 to 85°C

Relative humidity: ≤ 85%

Suitable for use in tropical climates

**5.4 Limits of current error and phase displacement (EN 60044-1)**

For class 0.5 - 1 the current error and phase displacement at rated frequency must not exceed the value stated in the table when the secondary winding represents a value from 25% to 100% of the rated burden.

For class 3 - the current error and phase displacement at rated frequency must not exceed the value stated in the table when the secondary winding represents a value from 50% to 100% of the rated burden.

**Table 2**

| Accuracy class | % current error (ratio) (±) as a percentage of the rated current stated below | | | | |
|---|---|---|---|---|---|
| | 5 | 20 | 50 | 100 | 120 |
| 0.5 | 1.5 | 0.75 | - | 0.5 | 0.5 |
| 1 | 3.0 | 1.5 | - | 1.0 | 1.0 |
| 3 | - | - | 3 | - | 3 |

**5.5 Materials**

Cases made of self-extinguishing polycarbonate, V0 classification according to UL 94

**Cat. Nos. 4 121 01/02/03/04/05/06/07**

Core: steel

Flange: PA

Winding: copper wire

Screws: brass

Half-shells: PC

Terminal shield: PC

Rail-fixing plate: PC

Lug for screw mounting: iron

**Cat. Nos. 4 121 12/14/16/17/19/23/24/25/26/31/32/33**

Core: steel

Flange: PA

Winding: copper wire

Terminals (blade + cage): iron

Cage structure: PC

Half-shells: PC

Nut: iron

Screws: iron

Ferrule for clamping onto busbar: PA

Rail-fixing plate: PC

Lug for screw mounting: iron

**Cat. Nos. 4 121 36/38/39/42/46/47/49/50/51/52/53/54**

Core: steel

Flange: PA

Winding: copper wire

Screws: brass and iron

Half-shells: PC

Washers: iron

Nut: brass and iron

Tie rod: brass

Terminal shield: PC

Ferrule for clamping onto busbar: PA

Shield: brass

**5.6 Connection**

**Cat. Nos. 4 121 01/02/03/04/05/06/07**

Primary: conducting cable

Max. tightening torque for the conducting primary busbar fixing screws: 0.2 Nm

Secondary: screw terminal block, max. 2 separate 2.5 $mm^2$ wires

**Cat. Nos. 4 121 16/17/19/12/14/23/24/25/26/31/32/33**

Primary: conducting busbar/cable

Busbar fixing: screws, with insulated terminals

Recommended tightening torque: 0.2 Nm

Secondary: 4 screw terminal blocks + 2 faston connectors

Faston connectors: 4.8 x 0.8 mm

Terminal block: max. cable cross-section 6 $mm^2$

Recommended tightening torque: 1 Nm

**Cat. Nos. 4 121 36/38/39/46/47/49**

Primary: conducting busbar

Max. tightening torque for the conducting primary busbar fixing screws: 0.2 Nm

Secondary: connected by lugs, tightened with M4 nut

**Cat. Nos. 4 121 42/50/51/52/53/54**

Primary: conducting cable

Max. tightening torque for the conducting primary busbar fixing screws: 0.2 Nm

Secondary: connected by lugs, tightened with M4 nut

**7 Weight**

| Cat. No. | Weight (g) | Cat. No. | Weight (g) |
|---|---|---|---|
| 4 121 01 | 180 | 4 121 31 | 320 |
| 4 121 02 | | 4 121 32 | |
| 4 121 03 | | 4 121 33 | |
| 4 121 04 | | 4 121 36 | 750 |
| 4 121 05 | | 4 121 38 | |
| 4 121 06 | | 4 121 39 | |
| 4 121 07 | | 4 121 42 | 750 |
| 4 121 16 | 300 | 4 121 46 | 1500 |
| 4 121 17 | | 4 121 47 | |
| 4 121 19 | | 4 121 49 | |
| 4 121 12 | 260 | 4 121 50 | 1300 |
| 4 121 14 | | 4 121 51 | |
| 4 121 23 | 420 | 4 121 52 | |
| 4 121 24 | | 4 121 53 | |
| 4 121 25 | | 4 121 54 | |
| 4 121 26 | | - | - |

## 6. GENERAL CHARACTERISTICS

**Compliant with the following standards:**

EN 60044-1

EN 60529

**Compliant with the following directives:**

REACH

RoHS