Brand of NTN Group

Technical data

ESPP204

Bearing units



Sheet metal housing, radial insert ball bearing with eccentric locking collar, single lip seal

KIT CONTENT

ES204G2, PP204

VISUAL (S)

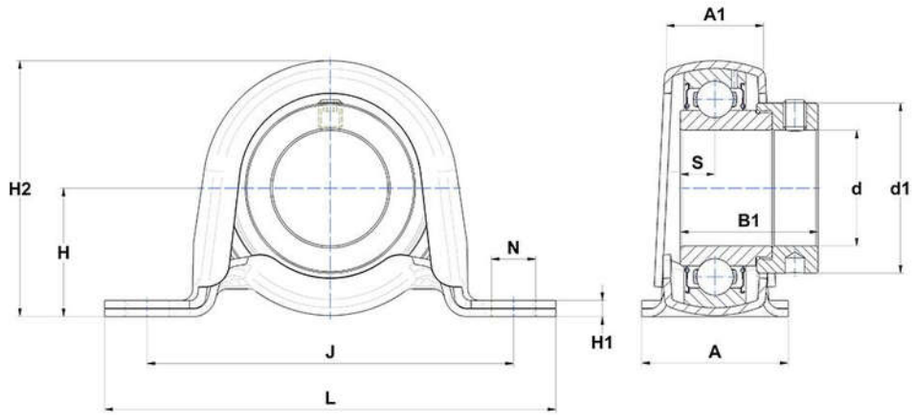

PRODUCT DEFINITION

Brand	SNR
A - Housing width	31,7 mm
A1 - Housing top width	21,6 mm
B - Width of Inner Ring	21,4 mm
d - Shaft diameter	20 mm
d1 - Outer dia of eccent. Lock. collar / nut of adapter sleeve	32,4 mm

PRODUCT DEFINITION	
H - Distance mounting base to centerline spheric. seating diam.	25,4 mm
H1 - Housing foot height	2,4 mm
H2 - Housing height	49,9 mm
J - Mounting holes distance	76 mm
L - Housing length	98,4 mm
N - Mounting hole dimension	9 mm
S - Distance front side/bearing centre	7,5 mm

PRODUCT PERFORMANCE	
C - Dynamic load rating	12800000 mN
C0 - Static load rating	6650000 mN
Operating temperature min.	253,15 °K
Operating temperature max.	373,15 °K

OTHER FEATURES	
Mass	0,24 kg
Recommended tightening torque for set screw	5.5 N-m