Flat suction gripper, Series FSR

- F = 16-2560 N
- external diameter 30-300 mm
- Internal thread





Ambient temperature min./max.	-10 ... 70 °C
Hardness according to standard	60 ± 5 Shore A
Abrasion value according to DIN 535 16	105 mm³
Weight	See table below

Technical data

Part No.	Compressed air connection	external diameter	Holding force *)	Volume	Max. curving on object Rmin
7320300000	M5	30 mm	16 N	2,5 cm³	50 mm
7320500000	G 1/8	50 mm	64 N	8 cm³	110 mm
7320750000	G 1/4	75 mm	160 N	28 cm³	165 mm
7321000000	G 3/8	100 mm	304 N	56 cm³	165 mm
7321500000	G 1/2	150 mm	608 N	160 cm³	306 mm
7322250000	G 3/4	225 mm	1480 N	500 cm³	465 mm
7323000000	G 1	300 mm	2560 N	1250 cm³	758 mm

Part No.	Weight
7320300000	0,01 kg
7320500000	0,02 kg
7320750000	0,03 kg
7321000000	0,07 kg
7321500000	0,21 kg
7322250000	0,75 kg
7323000000	1,8 kg

*) Theoretical value at 60% vacuum level, without safety factor

Technical information

To be used on even, smooth, and rough surfaces.

Technical information

Material	
Connector	Aluminum
Vacuum	Chloroprene rubber

Dimensions

Dimensions

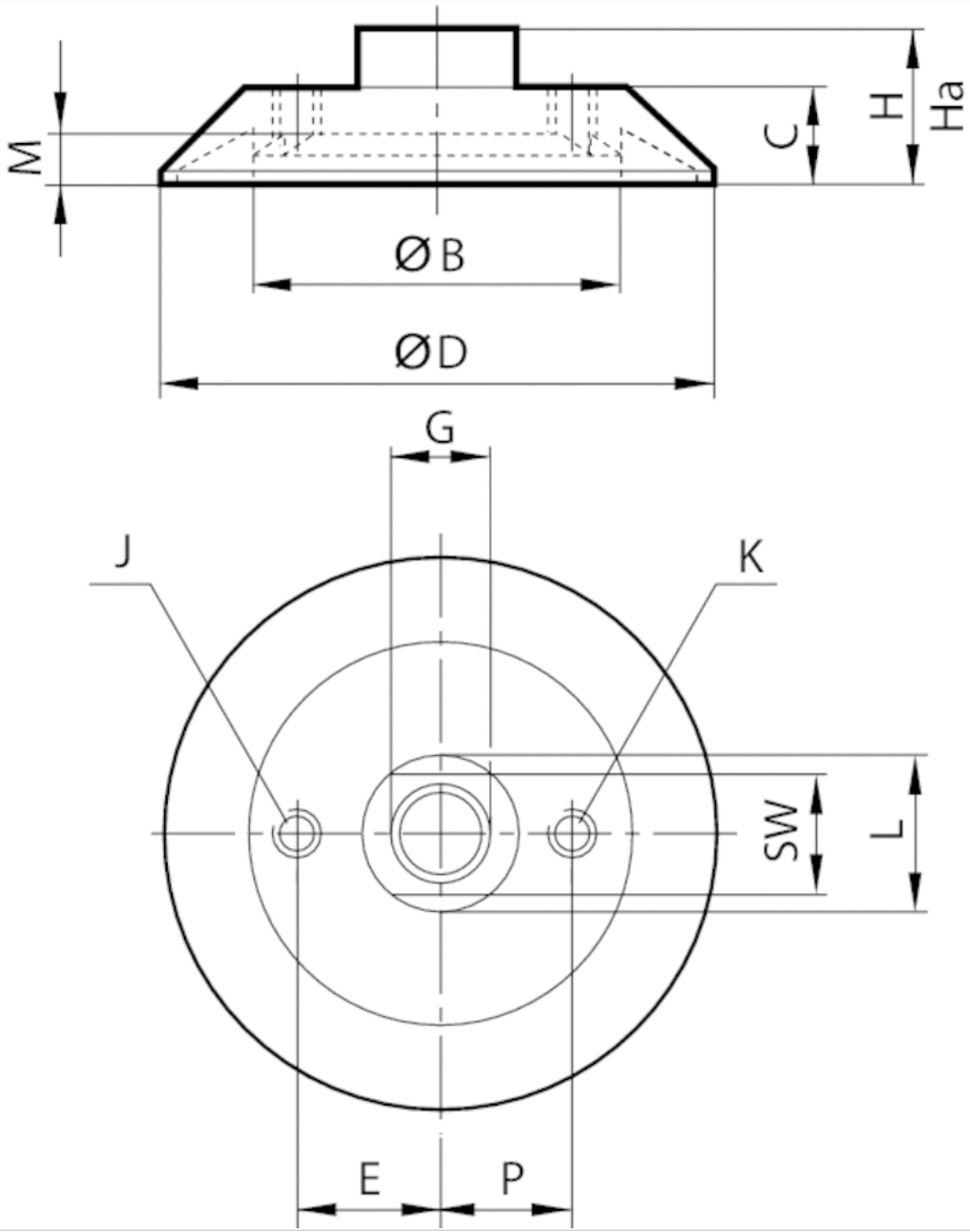

Dimensions

Part No.	ØD	G	Ø B	C	E	H	Ha*)	J	K	L	M	P	SW
7320300000	30 mm	M5	13	10	–	17	14.5	–	–	10	3.5	–	8
7320500000	50 mm	G 1/8	31	11	–	18	13.5	–	–	18	5.5	–	14
7320750000	75 mm	G 1/4	49	14	–	22	16.5	–	–	22	7	–	17
7321000000	100 mm	G 3/8	65.5	18	–	28	21	–	G 1/8	24	8.5	20	21
7321500000	150 mm	G 1/2	96	26	–	42	33	–	G 1/8	35	12	30	27
7322250000	225 mm	G 3/4	149	34	–	54	43	–	G 1/8	50	14	50	41
7323000000	300 mm	G 1	200	44	70	70	55	G 1/2	G 1/8	56	19	60	46

*) Height for vacuum operation

Dimensions

Technical information

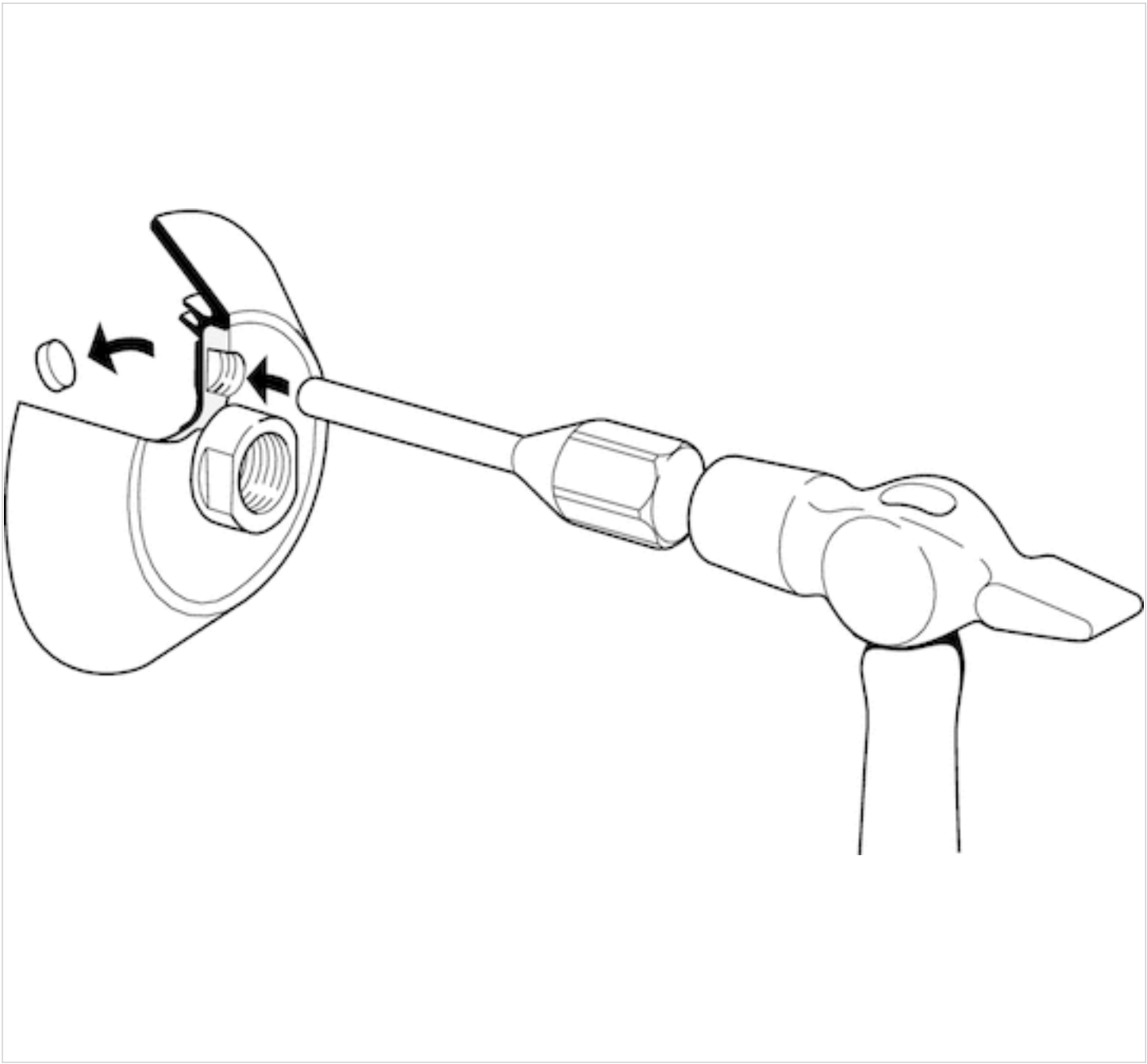

A ventilation valve can be connected at the thread connection of the suction cups Ø 100, 150, 225 and 300. For this, the plug must be knocked from the material with a hammer and mandrel.

Diagrams

Max. curving on object Rmin

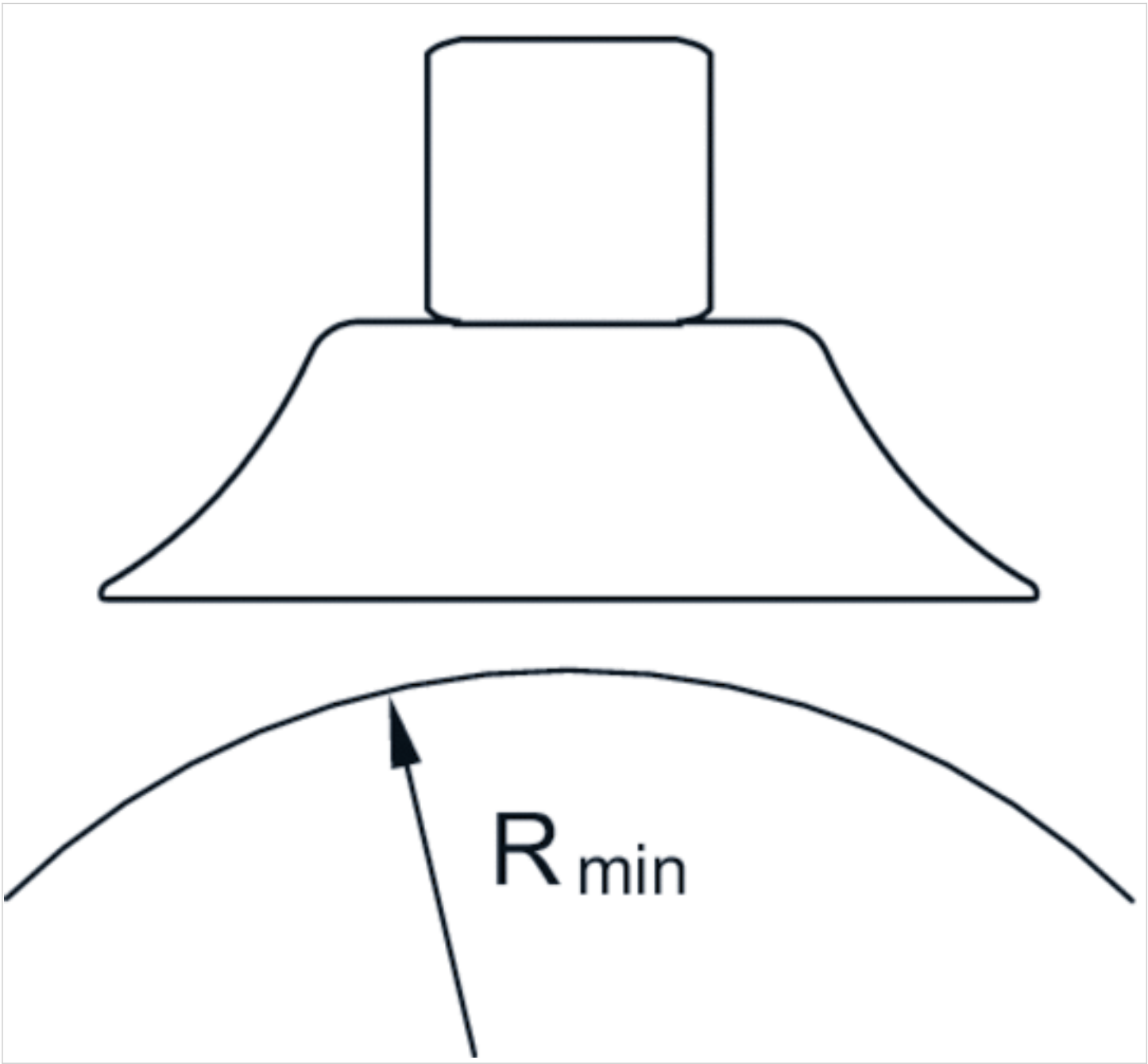

Efficient pneumatic solutions, our program: cylinders and drives, valves and valve systems, air supply management



Visit us: Emerson.com/Aventics

Your local contact: Emerson.com/contactus

Emerson.com

Facebook.com/EmersonAutomationSolutions

LinkedIn.com/company/Emerson-Automation-Solutions

Twitter.com/EMR_Automation

An example configuration is depicted on the title page. The delivered product may thus vary from that in the illustration. Subject to change. This Document, as well as the data, specifications and other information set forth in it, are the exclusive property of AVENTICS GmbH. It may not be reproduced or given to third parties without its consent. Only use the AVENTICS products shown in industrial applications. Read the product documentation completely and carefully before using the product. Observe the applicable regulations and laws of the respective country. When integrating the product into applications, note the system manufacturer's specifications for safe use of the product. The data specified only serve to describe the product. No statements concerning a certain condition or suitability for a certain application can be derived from our information. The information given does not release the user from the obligation of own judgement and verification. It must be remembered that the products are subject to a natural process of wear and aging.

The Emerson logo is a trademark and service mark of Emerson Electric Co. Brand logotype are registered trademarks of one of the Emerson family of companies. All other marks are the property of their respective owners. © 2021 Emerson Electric Co. All rights reserved.
2021-06

EMERSON

CONSIDER IT SOLVED™