Sensor, Series ST6

- 6 mm T-slot
- with cable
- open cable ends, 2-pin
- UL certification
- Reed
- Direct mounting for series PRA, PRE, CCI, KPZ, SSI, GPC, CVI
- Indirect mounting for series TRB, ITS, CCL-IS, MNI, CSL-RD, ICM, KHZ, RTC, TRR



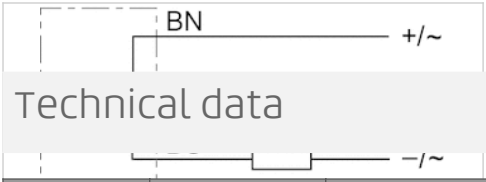

Certificates	CE declaration of conformity, cULus, RoHS
Ambient temperature min./max.	-30 ... 80 °C
Protection class	IP65, IP67, IP69K
Switching point precision mT	±0,1
Nominal current, actuated state	30 mA
Quiescent current (without load)	8 mA
Min./max. DC operating voltage	See table
Min./max. AC operating voltage	See table
Hysteresis	≥ 0,2 mT
Switching logic	NO (make contact)
LED status display	Yellow
Vibration resistance	10 - 55 Hz, 1 mm
Shock resistance	30 g / 11 ms

Technical data

Part No.		for	Type of contact	Cable length L	Min./max. DC operating voltage
R412022866		PRA, PRE, CCI, KPZ, SSI, GPC, CVI	Reed	3 m	10 ... 230 V DC
R412022869		PRA, PRE, CCI, KPZ, SSI, GPC, CVI	Reed	3 m	10 ... 30 V DC
R412022870		PRA, PRE, CCI, KPZ, SSI, GPC, CVI	Reed	5 m	10 ... 30 V DC
R412022871		PRA, PRE, CCI, KPZ, SSI, GPC, CVI	Reed	10 m	10 ... 30 V DC
R412022853		PRA, PRE, CCI, KPZ, SSI, GPC, CVI	electronic PNP	3 m	10 ... 30 V DC
R412022855		PRA, PRE, CCI, KPZ, SSI, GPC, CVI	electronic PNP	5 m	10 ... 30 V DC
R412022857		PRA, PRE, CCI, KPZ, SSI, GPC, CVI	electronic PNP	10 m	10 ... 30 V DC
R412022849		PRA, PRE, CCI, KPZ, SSI, GPC, CVI	electronic NPN	3 m	10 ... 30 V DC
R412022850		PRA, PRE, CCI, KPZ, SSI, GPC, CVI	electronic NPN	5 m	10 ... 30 V DC

Part No.	Min./max. AC operating voltage	Voltage drop U at Imax	DC switching current, max.	AC switching current, max.
R412022866	10 ... 230 V AC	I*Rs	0,13 A	0,13 A
R412022869	10 ... 30 V AC	I*Rs	0,3 A	0,5 A
R412022870	10 ... 30 V AC	I*Rs	0,3 A	0,5 A
R412022871	10 ... 30 V AC	I*Rs	0,3 A	0,5 A
R412022853	-	≤ 2,5 V	0,13 A	-
R412022855	-	≤ 2,5 V	0,13 A	-
R412022857	-	≤ 2,5 V	0,13 A	-
R412022849	-	≤ 2,5 V	0,13 A	-
R412022850	-	≤ 2,5 V	0,13 A	-

Part No.	Switching capacity	Max. switching frequency	Operating current, not switched
R412022866	Reed, 2-pin: max. 10 W, Reed, 3-pin: max. 6 W	400 Hz	-
R412022869	Reed, 2-pin: max. 10 W, Reed, 3-pin: max. 6 W	400 Hz	-
R412022870	Reed, 2-pin: max. 10 W, Reed, 3-pin: max. 6 W	400 Hz	-
R412022871	Reed, 2-pin: max. 10 W, Reed, 3-pin: max. 6 W	400 Hz	-
R412022853	-	1000 Hz	8 mA
R412022855	-	1000 Hz	8 mA
R412022857	-	1000 Hz	8 mA
R412022849	-	1000 Hz	8 mA
R412022850	-	1000 Hz	8 mA

Part No.	Operating current, switched	Version	Fig.	
R412022866	-	Protected against polarity reversal	Fig. 1	1)
R412022869	-	Protected against polarity reversal	Fig. 2	2)
R412022870	-	Protected against polarity reversal	Fig. 2	2)
R412022871	-	Protected against polarity reversal	Fig. 2	2)
R412022853	30 mA	short circuit resistant, Protected against polarity reversal	Fig. 2	2)
R412022855	30 mA	short circuit resistant, Protected against polarity reversal	Fig. 2	2)
R412022857	30 mA	short circuit resistant, Protected against polarity reversal	Fig. 2	2)
R412022849	30 mA	short circuit resistant, Protected against polarity reversal	Fig. 2	2)
R412022850	30 mA	short circuit resistant, Protected against polarity reversal	Fig. 2	2)

Technical information

No cULus certification for 230 V variant.

Technical information

Material	
Housing	Polyamide
Cable sheath	Polyurethane
Locking screw	Stainless steel

Dimensions

Fig. 1

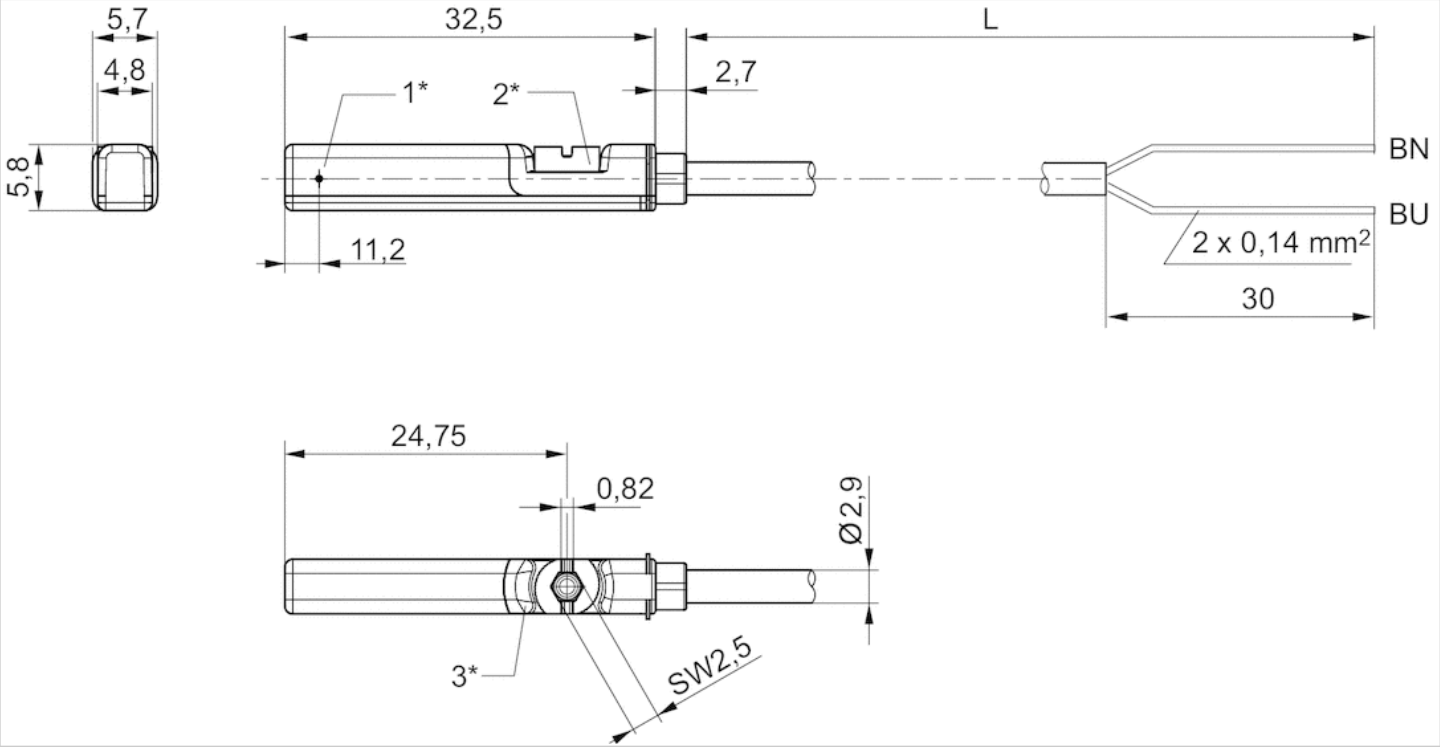

1* = switching point 2* = locking screw 3* = LED window, transparent
L = cable lengthBN=brown, BU=blue

Fig. 2

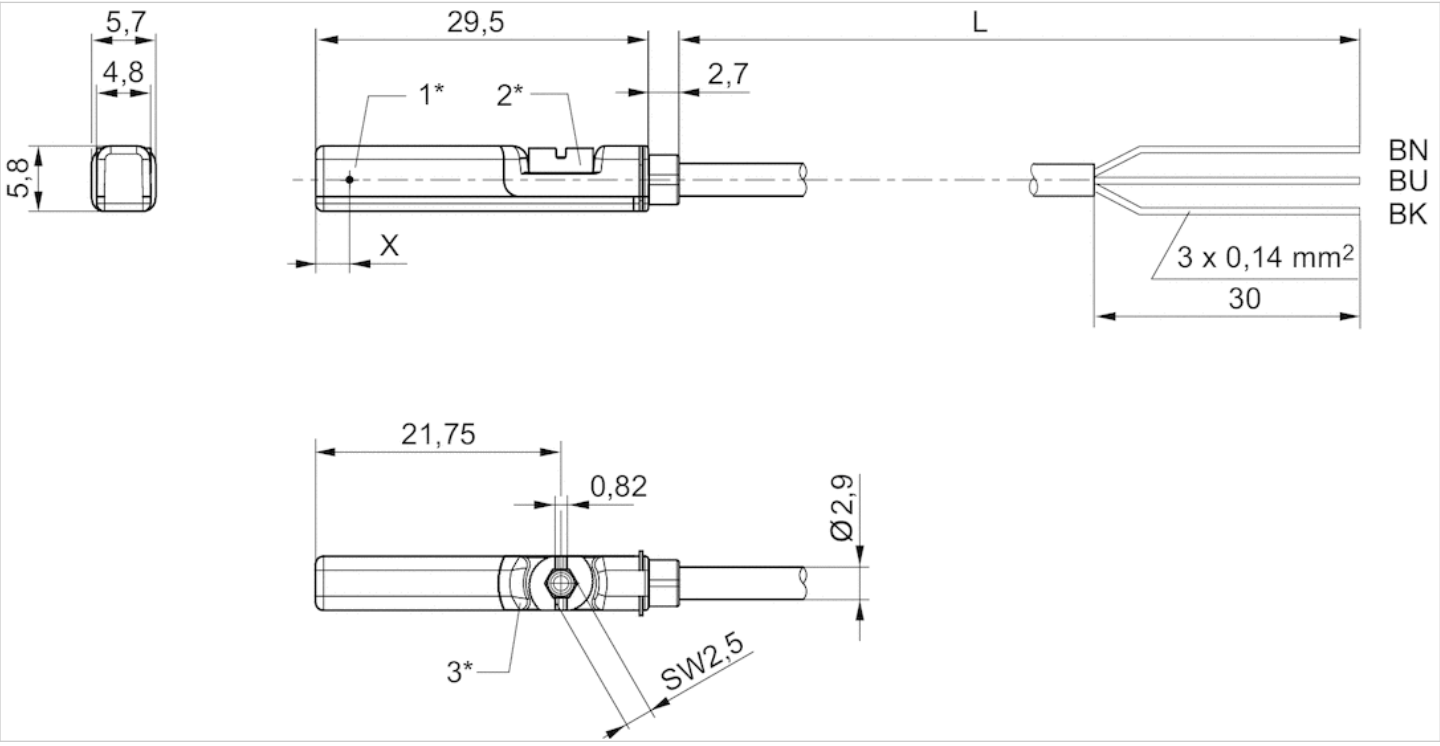

1* = switching point 2* = locking screw 3* = LED window, transparent
L = cable lengthBN = brown, BK = black, BU = blue
X = electronic: 11.6 mm