LeCroy

ZS1000

High Impedance Active Probe



Instruction Manual

February 2007

Warranty

LeCroy warrants this oscilloscope accessory for normal use and operation within specification for a period of one year from the date of shipment. Spare parts, replacement parts and repairs are warranted for 90 days.

In exercising its warranty, LeCroy, at its option, will either repair or replace any assembly returned within its warranty period to the Customer Service Department or an authorized service center. However, this will be done only if the product is determined by LeCroy's examination to be defective due to workmanship or materials, and the defect is not caused by misuse, neglect, accident, abnormal conditions of operation, or damage resulting from attempted repair or modifications by a non-authorized service facility.

The customer will be responsible for the transportation and insurance charges for the return of products to the service facility. LeCroy will return all products under warranty with transportation charges prepaid.

This warranty replaces all other warranties, expressed or implied, including but not limited to any implied warranty of merchantability, fitness or adequacy for any particular purposes or use. LeCroy shall not be liable for any special, incidental, or consequential damages, whether in contract or otherwise.

Corporate Headquarters

700 Chestnut Ridge Road
Chestnut Ridge, NY 10977-6499
Tel: (845) 578-6020, Fax: (845) 578-5985

Internet: www.lecroy.com

Copyright 2007 by LeCroy Corporation. All rights reserved.

LeCroy, ActiveDSO, JitterTrack, WavePro, WaveMaster, WaveSurfer, WaveLink, WaveExpert, WaveJet, and Waverunner are registered trademarks of LeCroy Corporation. Other product or brand names are trademarks or requested trademarks of their respective holders. Information in this publication supersedes all earlier versions. Specifications subject to change without notice.

LeCroy products are covered by International and U.S. patents, issued and pending.

Manufactured under an ISO 9000 Registered Quality Management System Visit www.lecroy.com to view the certificate.	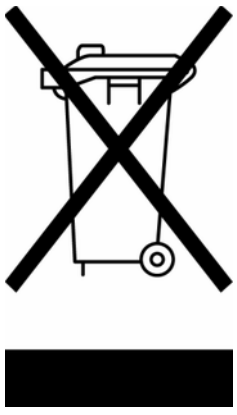	This electronic product is subject to disposal and recycling regulations that vary by country and region. Many countries prohibit the disposal of waste electronic equipment in standard waste receptacles. For more information about proper disposal and recycling of your LeCroy product, please visit www.lecroy.com/recycle.

ZS1000-OM-E Rev C

914903-00 Rev A

DECLARATION OF CONFORMITY

according to ISO/IEC Guide 22 and EN 45014:1998

Manufacturer's Name:	LeCroy Corporation
Manufacturer's Address:	700 Chestnut Ridge Road Chestnut Ridge, NY 10977 USA

herewith declare that

Product(s) Name:	Active Voltage Probe
Model Number(s):	ZS1000, ZS1500

including all their options are in conformity with the provisions of the following EC directive(s), including the latest amendments, and with national legislation implementing these directives:

73/23/EEC Low Voltage Directive
89/336/EEC EMC Directive

and that conformity with Council Directive 73/23/EEC is based on

EN 61010-1:2001	Safety requirements for electrical equipment for measurement control and laboratory use

and that conformity with Council Directive 89/336/EEC is based on

EN 61326/A3:2003	EMC requirements for electrical equipment for measurement control and laboratory use	
Emissions	EN 55011/A2:2002	Conducted and Radiated Emissions
Immunity	EN 61000-4-2/A2:2001	Electrostatic Discharge
	EN 61000-4-3/A1:2003	RF Radiated Electromagnetic Field



By: David C. Graef
Vice President & Chief Technology Officer

Place: LeCroy Corporation
700 Chestnut Ridge Road
Chestnut Ridge, NY 10977
USA

Date: December 18, 2007

European Contact:
Your local LeCroy Sales Office or

LeCroy Europe GmbH
Waldhofer Str 104
D-69123 Heidelberg
Germany

Tel: (49) 6221 82700
Fax: (49) 6221 834655

Warning: This is a Class A product. In a domestic environment this product may cause radio interference, in which case the user may be required to take adequate measures.

BLANK PAGE

ZS1000 Table of Contents

Safety Information



Operator Safety 1-1
Conventions Used in this Manual 1-1

Overview

Product Description 2-1
Key Benefits 2-1
Standard Accessories 2-2
Optional Accessories 2-2

Features and Accessories

Probe Head 3-1
Description of Standard and Optional Accessories 3-1
A. Tips 3-1
B. Grounds 3-3
C. Leads 3-6

Operation

Handling the Probe 4-1
Connecting the Probe to the Test Instrument 4-1
Connecting the Probe to the Test Circuit 4-1
Operation with a LeCroy Oscilloscope 4-1

High Frequency Measurements

Input Loading 5-1
Inductive Loading (Lead Length) 5-1
Capacitive Loading 5-2

Care and Maintenance

Cleaning 6-1
Calibration Interval 6-1
Service Strategy 6-1
Returning a Defective Probe 6-1
Replacement Parts 6-2

Performance Verification

Test Equipment Required 7-1
Preliminary Procedure 7-2
Functional Check 7-3
Procedure 7-4
A. Output Zero Voltage 7-4
B. LF Attenuation Accuracy.....7-4

Adjustment Procedure

Introduction 8-1
Test Equipment Required 8-1
Preliminary Procedure 8-2
Procedure 8-3
A. Adjust Output Zero.....8-3
B. Verify Calibration 8-4

Specifications

Nominal Characteristics 9-1
Warranted Characteristics 9-1
Typical Characteristics 9-1
Environmental Characteristics 9-2
Physical Characteristics 9-2
Compliance and Certifications 9-3

Appendix A

Performance Verification Test Record A-1
Equipment Used: A-2
ZS1000 Test Record A-2

1 Safety Information

OPERATOR SAFETY

This symbol appears on the product: 

This refers you to additional information contained in this manual. The corresponding information in the manual is similarly denoted.

To avoid personal injury and to prevent fire or damage to the probe or any products connected to it, review and comply with the following safety precautions.

Connect to properly grounded instruments. This probe is to be only used with test instruments with input connectors which the BNC shield (ring) is connected to earth ground.

Connect the probe properly:

Connect the probe to the measurement instrument before connecting probe input to test circuit. Do not disconnect probe from test instrument while the test leads are connected to a voltage source.

Do not apply any potential to the input which exceeds the maximum ratings of the probe (section 9, "Specifications").

Comply with the voltage derating curve. When measuring high frequency signals, be sure to comply with the voltage versus frequency derating curve (section 9, "Specifications").

Do not use in wet or explosive atmospheres.

For indoor use only. This probe is intended for indoor use and should be operated in a clean, dry, environment.

Do not use the probe if any part is damaged. All maintenance should be referred to qualified service personnel.

Avoid physical injury. The probe tips are extremely sharp. Use care when handling to prevent injury, including accidental skin puncture.

Use of the probe and or the test instrument it is connected to in a manner not specified by the manufacturer may impair the protection mechanisms.

CONVENTIONS USED IN THIS MANUAL

The following conventions may appear in this manual:

Note

A Note contains information relating to the use of the product.

CAUTION

A Caution contains information that should be followed to avoid possible damage to the probe or the products connected to it.

This symbol appears on the product: 

This refers you to additional information contained in this manual. The corresponding information in the manual is similarly denoted.

###

2 Overview

PRODUCT DESCRIPTION

The 1 GHz ZS1000 is a small, high impedance active probe designed to meet today's increasing demand for measurements on a variety of test points.

With low input capacitance and high input resistance, circuit loading is minimized.

The ZS1000 can be used with LeCroy's WaveSurfer, WaveRunner, WaveMaster, and WavePro series platforms with firmware version 4.9.3 or later.

With the ProBus interface, the ZS1000 becomes an integral part of the oscilloscope. The probe can be controlled from the oscilloscope's front panel. The oscilloscope provides power to the probe, so there is no need for a separate power supply or batteries.

KEY BENEFITS

- High frequency performance
- Low input capacitance
- Wide dynamic range
- ProBus interface
- Four interchangeable tips for probing a variety of test points (one standard, three optional accessories)

STANDARD ACCESSORIES

The ZS1000 probe is shipped with the following standard accessories:

Item:	Quantity:
Straight Tip	4
Sprung Hook	2
Right Angle Connector	1
Offset Ground	2
Ground Blade	1
Copper Pad	2
Short Single lead	1
Long Single Lead	1
Instruction Manual	1
Certificate of calibration	1
Y-lead Adapter	1
Color Coding Rings	4 sets

OPTIONAL ACCESSORIES

The following items are available as optional accessories for the ZS1000 probe:

IC Lead Tip
Discrete SMD Tip
Bent Sharp Tip
Bendable Pogo Ground
Ground Spring with Hook
Solder-in Ground
Square Pin Ground Spring
Short Right-angle Lead
Long Right-angle Lead

For part number information for standard and optional accessories refer to, Care and Maintenance, Replaceable Parts List.

###

3 Features and Accessories

The ZS1000 probe is provided with numerous features and accessories to make probing and connecting to different test points easier than ever.

PROBE HEAD

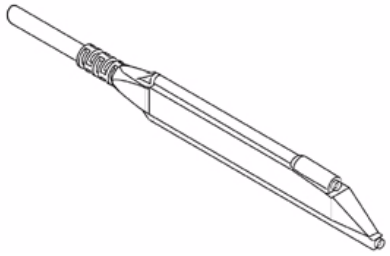

The small, low mass probe head is designed for ease of use and high performance.

The probe tip socket fits easily onto 0.025 inch square pins for direct access to test points. Several different adapters are available which connect directly in the probe socket.

The ground socket will accept several different ground leads to provide a short ground path for high frequency performance.

DESCRIPTION OF STANDARD AND OPTIONAL ACCESSORIES

The following accessories can be pushed into the probe tip socket, ground socket or any other socketed lead or adapter.

A. Tips

Straight Tip

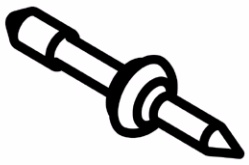

Rugged tip designed to connect to the smallest vias and small test points. Fits in either probe socket.

PK-ZS-001, package of 4

IC Lead Tip

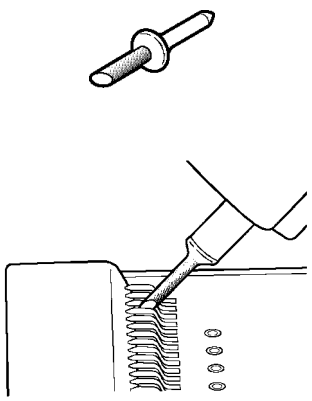

Covered in insulation on all sides (except for a small edge), this tip was designed to prevent shorting neighboring IC leads. The gold part of the tip is not insulated and should touch the IC lead to be tested. It is one-size-fits-all and will work with any IC lead pitch. Fits in either probe socket.

The IC Lead Tip is an optional accessory for the ZS1000.

PACC-PT003, package of 4

Discrete SMD Tip

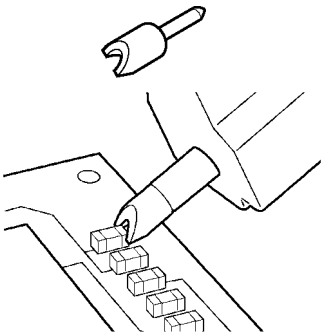

The crescent shape of this tip is designed to fit tightly on capacitors, resistors, transistors and other surface mount components with discrete leads. Fits in either probe socket.

The SMD Discrete Tip is an optional accessory for the ZS1000.

PACC-PT004, package of 4

Bent Sharp Tip

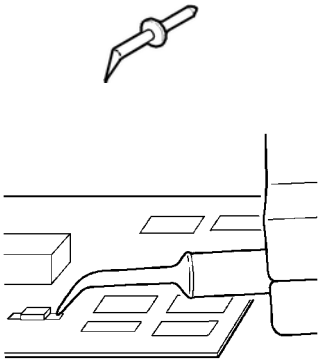

Made out of titanium, this tip is ideal for situations that require the user to hold the probe parallel to the circuit board under test. Also gives the user more control when holding the probe like a pencil. Fits in either probe socket.

The Bent Sharp Tip is an optional accessory for the ZS1000.

PACC-PT005, package of 4

B. Grounds

Micro Clip (0.5 mm) Sprung Hook

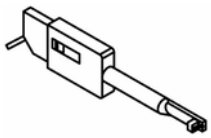

A pincher-like spring hook tip designed to hold onto fine pitch leads and small components, commonly found in SMD ICs. Fits in either probe socket, or can be used with a lead.

The Sprung Hook is a standard accessory for the ZS1000 and available in black and red.

PK-ZS-007R, PK-ZS-007B, package of 4 each

Ground Spring with Hook

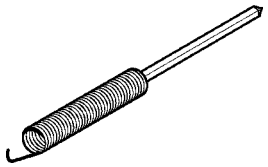

A flexible spring connected to a square pin that fits into either of the probe head sockets. Designed to be used as a ground lead, there is a hook on the end of the spring so that it can probe general circuits.

The Ground Spring with Hook is an optional accessory for the ZS1000.

PACC-LD001, package of 4

Square Pin Ground Spring

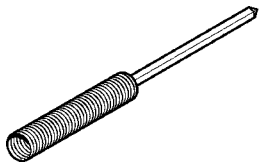

A flexible spring connected to a square pin that fits into either of the probe sockets. Designed to be attached to a square pin on the circuit under test.

The square pin ground spring is an optional accessory for the ZS1000 probe.

PACC-LD002, package of 4

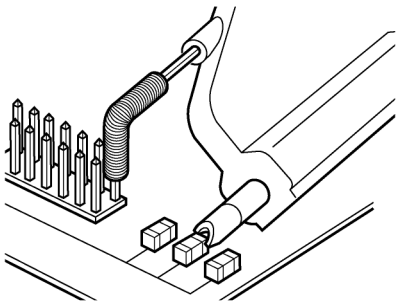

Offset Ground



The offset pin is designed to be attached to either socket of the probe head. The offset pin is the highest quality grounding solution and is recommended in high frequency applications.

The offset ground is designed to connect to the ground socket and wrap around the probe head. This gives the ability to a probe signal and ground that are extremely close together. The short length provides high-quality grounding for high-frequency applications.

PK-ZS-002, package of 4

Ground Blade and Copper Pad

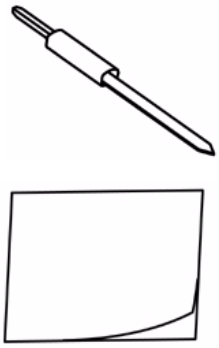

The Ground Blade and Copper Pad are intended to work together for the best grounding solution for probing an IC. The Ground Blade is designed to provide a short, low inductance ground path. The Copper Pad is adhesive backed to stick to the top of an IC, and can then be soldered to the IC ground.
The Copper Pad can also be used with the Offset Ground.

PK-ZS-008, package of 4
PK-ZS-009, package of 4

C. Leads

While longer leads provide greater flexibility when connecting the probe to a circuit, the added inductance may degrade the fidelity of high frequency signals. See Section 4 for additional information.

Short and Long Lead

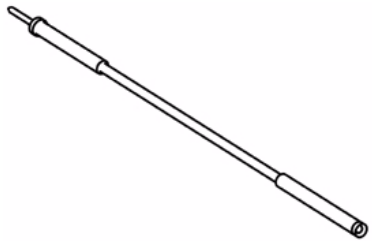

This lead has a socket on one end and a square pin on the other to connect to the input or ground socket of the probe body, and may be used for general purpose probing.

PK-ZS-003 (short),
PK-ZS-004 (long), packages of 4

Y Lead Adapter

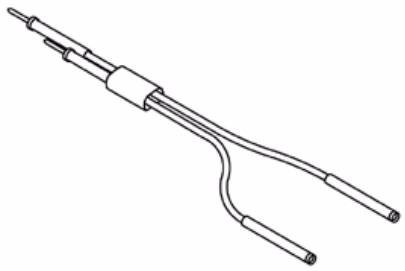

This lead is used for both ground and input lead simultaneously.

It has two sockets on one end and two square pins on the other and may be used for general purpose probing.

PK-ZS-005, packages of 4

###

4 Operation

HANDLING THE PROBE

Exercise care when handling and storing the probe. Always handle the probe by the probe body or compensation box. Avoid putting excessive strain or exposing the probe cable to sharp bends.

CONNECTING THE PROBE TO THE TEST INSTRUMENT

The ZS1000 probe has been designed for use with LeCroy's WaveSurfer, WaveRunner, WaveMaster, and WavePro platforms equipped with the ProBus interface. When you attach the probe output connector to the oscilloscope's input connector, the oscilloscope will recognize the probe, provide proper termination and activate the probe control functions in the user interface.

CONNECTING THE PROBE TO THE TEST CIRCUIT

To maintain the high performance capability of the probe in measurement applications, care must be exercised in connecting the probe to the test circuit. Increasing the parasitic capacitance or inductance in the input paths may introduce a "ring" or slow the rise time of fast signals. Input leads which form a large loop area will pick up any radiated electromagnetic field which passes through the loop and may induce noise into the probe input.

Using one of the available accessories makes the ZS1000 probe with its small profile and low mass head ideally suited for applications in dense circuitry.

OPERATION WITH A LECROY OSCILLOSCOPE

When the ZS1000 probe is connected to any compatible LeCroy oscilloscope, the displayed scale factor and measurement values will be automatically adjusted.

Control through the oscilloscope's interface can be found in the Coupling menu of the channel to which the probe is connected.

Turning the **Volts/Div** knob will control the oscilloscope's scale factor to give full available dynamic range up to 2 V/div.

###

BLANK PAGE

5 High Frequency Measurements

INPUT LOADING

When you touch a probe to the circuit under test, the probe will affect your measurement because of the probe's input impedance introduced into the circuit. All probes present resistive, capacitive and inductive loading.

INDUCTIVE LOADING (LEAD LENGTH)

A significant element in this circuit is the inductance shown in the input ground leads of the oscilloscope probe.

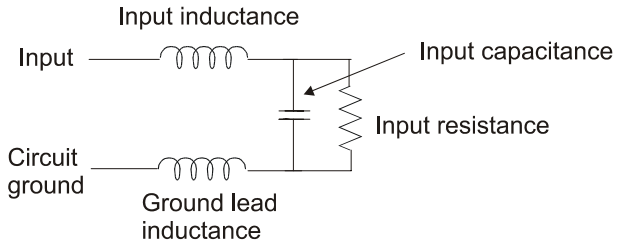

Figure 5-1. Probe Input Equivalent Circuit

The ground lead is the primary return path for the current resulting from the input voltage acting on the probe's input impedance. The ground lead and input lead inductances act with the probe's input capacitance to form series L-C network. The impedance of a series LC network will drop dramatically at its resonant frequency. This is the cause of the "ring" we often see after the leading edge of pulses in measured waveforms. This effect is referred to as ground lead corruption. Because it is impossible to eliminate either the L or C from this circuit, the method to improve waveform fidelity is to raise the resonant frequency beyond the bandwidth of interest in the measurement.

The resonant frequency of a simple LC circuit can be represented by:

$$F_{Resonance} = \frac{1}{2\pi\sqrt{LC}}$$

The resonant frequency of a series LC circuit can be raised by decreasing the inductance, capacitance or both.

Since the input capacitance is already very low and cannot be reduced, you can only try to reduce the inductance. This can be accomplished by using the shortest possible input lead as well as the shortest possible ground lead.

For example, to obtain the shortest possible ground lead when measuring IC related signals, attach a small piece of copper clad material to the top of the IC package and connect this to the package grounding wires. Using the shortest ground lead and input lead available makes probing signals on the package easier and makes for the shortest lead length for the best signal fidelity.

To illustrate how dramatic this effect is, we will work a simple example.

Assuming an input capacitance of 0.9 pF and a total lead length (input and ground) of 2 inches (inductance of ≈ 25 nH/inch) such a setup may cause ringing with a resonant frequency (f_0) of:

$$f_0 = \frac{1}{2\pi\sqrt{50 \times 10^{-9} \times 0.9 \times 10^{-12}}} = 750\ MHz$$

This frequency is well within the passband of the probe and will therefore show up as part of the measured signal at faster time/div settings.

To determine how fast a waveform to be measured can be without causing ringing on a probe like this, divide the BW (ringing frequency) of the probe into 0.35:

$$t_{rise} = \frac{0.35}{BW} = \frac{0.35}{750MHz} = 0.47\ ns$$

Any input signal with a rise time faster than 0.47 ns can cause ringing.

CAPACITIVE LOADING

Capacitive loading is usually the most troublesome of the three loading effects.

It can affect the rise time, bandwidth and delay time measurements.

At higher frequencies the capacitive loading can affect the amplitude as well as the waveshape of the measured signal by introducing an exponential response to the waveform.

For a simple RC network the time constant of this exponential response is:

$$t_{rise} = 2.2 \times C_{total} \times R_{total}$$

where C_{total} is the combined probe and circuit capacitance and R_{total} is combined circuit and probe resistance.

For a setup where C_t = 0.9 pF and a source resistance is 250 Ω, the measured rise time will be 0.495 ns, which will correspond to a bandwidth of 909 MHz, assuming no inductive loads.

(t_{rise}=2.2 x 0.9 X 10^{-12} x 250 Ω = 0.495 ns)

(parallel combination of 250 Ω and 1 MΩ is still 250 Ω)

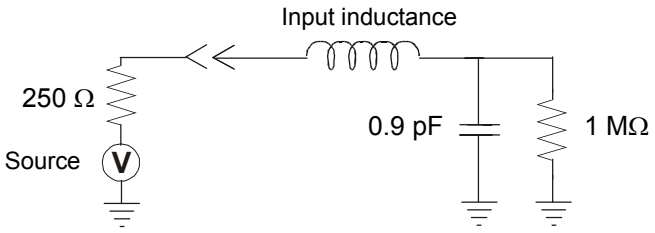

Figure 5-2. Probe input equivalent circuit

To illustrate the effect of capacitive loading at higher frequencies:

At a frequency of 750 MHz the reactance of the 0.9 pF capacitance is 236 Ω, and at 1.0 GHz the reactance has been lowered to 177 Ω

If, at a given frequency, the source impedance is large with respect to the input impedance, a measurable reduction in the output signal amplitude may occur.

$$V_{out} = \frac{Z_{probe}}{Z_{probe} + Z_{source}} \times V_{in}$$

where:

Z_{probe} is the probe's input impedance and

Z_{source} is the source impedance

As an example:

At 750 MHz, where the probe input impedance has reduced to 236 Ω, and a source resistance of 250 Ω the probe output amplitude is reduced to:

$$V_{out} = \frac{236}{236 + 250} = 0.49 \times V_{in}$$

###

6 Care and Maintenance

CLEANING

The exterior of the probe and cable should be cleaned only using a soft cloth lightly moistened with water or isopropyl alcohol. The use of abrasive agents, strong detergents, or other solvents may damage the probe. Always ensure that the input leads are free of debris.

Note

The probe case is not sealed and should never be immersed in any fluid.

CALIBRATION INTERVAL

The recommended calibration interval is one year. (Performance Verification and Adjustment Procedures are included in this manual.)

SERVICE STRATEGY

The ZS1000 probe utilizes fine pitch surface mount devices. It is therefore impractical to attempt to repair in the field. Defective probes must be returned to a LeCroy service facility for diagnosis and exchange. A defective probe under warranty will be replaced with a factory refurbished probe. A probe that is not under warranty can be exchanged for a factory refurbished probe for a modest fee. You must return the defective probe in order to receive credit for the probe core.

RETURNING A DEFECTIVE PROBE

The procedure for returning a defective probe is as follows:

Contact your local LeCroy sales representative to find out where to return the product. All returned products should be identified by model number and serial number. Provide your name and contact number and if possible describe the defect or failure. In case of products returned to the factory, a Return Authorization Number (RAN) should be used. The RAN can be established by contacting your nearest LeCroy office, or the New York Customer Care Center.

Return shipment should be made prepaid. LeCroy cannot accept COD or Collect Return shipments. We recommend air-freighting. It is impor-

tant that the RAN be clearly shown on the outside of the shipping package for prompt redirection to the appropriate department.

1. Contact your local LeCroy sales or service representative to obtain a Return Authorization Number.
2. Remove all accessories from the probe. Do not include the manual.
3. Pack the probe in its case, surrounded by the original packing material (or equivalent) and box.
4. Label the case with a tag containing
   - The RAN
   - Name and address of the owner
   - Probe model and serial number
   - Description of failure
5. Package the probe case in a cardboard shipping box with adequate padding to avoid damage in transit.
6. Mark the outside of the box with the shipping address given to you by the LeCroy representative; be sure to add the following:
   - ATTN: <RAN assigned by the LeCroy representative>
   - FRAGILE
7. Insure the item for the replacement cost of the probe.
8. Ship the package to the appropriate address.

REPLACEMENT PARTS

The probe connection accessories and other common parts can be ordered through the regional customer care centers. Refer to list below for LeCroy part numbers. Defective probes can be replaced on an exchange basis. The replacement exchange probe will have been factory repaired, inspected and calibrated to the same standards as a new product. In order to obtain an exchange probe, you must return the defective probe. The returned probe should be sent back to the regional customer care center without any accessories, manual or case.

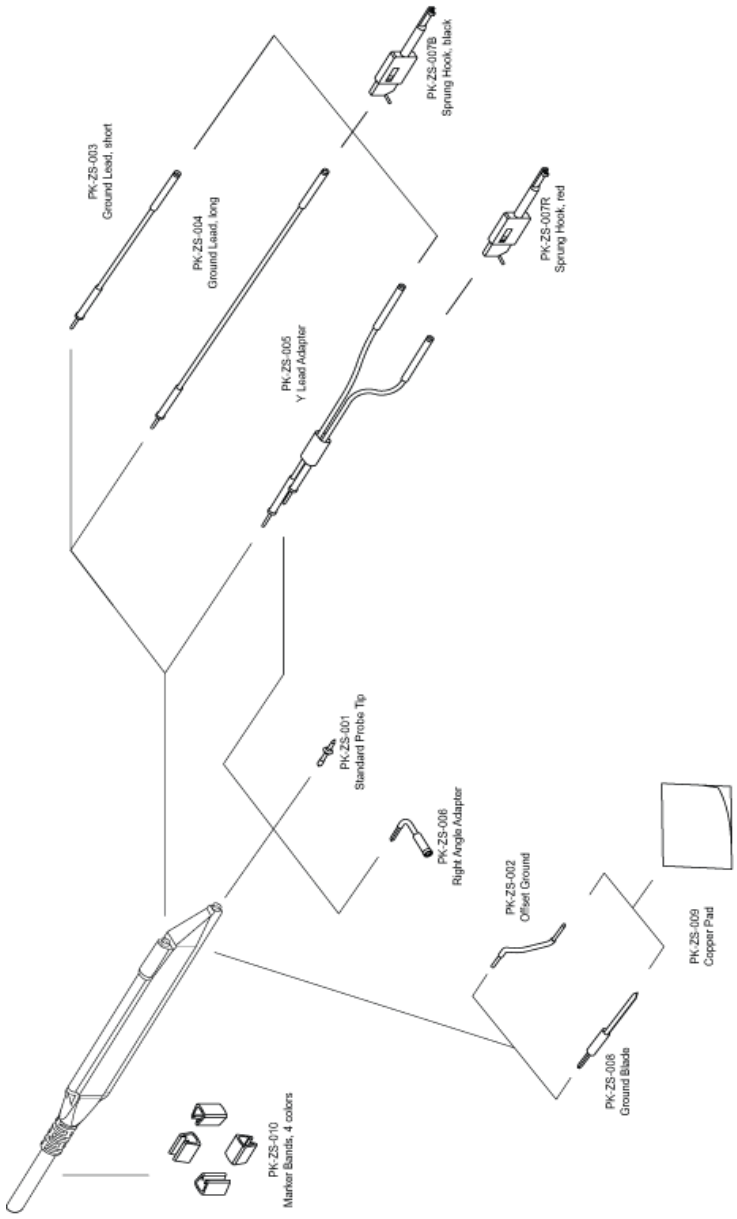

Figure 6-1. Replaceable Parts Selected by Input and Ground Accessory

Table 6-1: Replaceable Parts List

Item	LeCroy P/N	Replacement Quantity
Straight Tip	PK-ZS-001	4
Offset Ground	PK-ZS-002	4
Short Lead	PK-ZS-003	4
Long Lead	PK-ZS-004	4
Y Lead Adapter	PK-ZS-005	4
Right Angle Connector	PK-ZS-006	4
Sprung Hook - Red	PK-ZS-007R	4
Sprung Hook - Black	PK-ZS-007B	4
Ground Blade	PK-ZS-008	4
Copper Pad	PK-ZS-009	4
Color Coding Rings	PK-ZS-010	4 sets
IC Lead Tip	PACC-PT003	4
Discrete SMD Tip	PACC-PT004	4
Bent Sharp Tip	PACC-PT005	4
Solder-In Ground	PACC-CD007	2
Bendable Pogo Ground	PACC-CD008	2
Ground Spring with Hook	PACC-LD001	4
Square Pin Ground Spring	PACC-LD002	4
Short Right Angle Lead	PACC-LD003	4
Long Right Angle Lead	PACC-LD004	4

###

7 Performance Verification

This procedure can be used to verify the warranted characteristics of the ZS1000 High Impedance Active Probe.

The recommended calibration interval for the model ZS1000 is one year. The complete performance verification procedure should be performed as the first step of annual calibration. Test results can be recorded on a photocopy of the Test Record provided in Appendix A at the end of the manual.

Performance verification can be completed without removing the probe covers or exposing the user to hazardous voltages. Adjustment should only be attempted if a parameter measured in the Performance Verification Procedure is outside the specification limits.

Note

Adjustment should only be performed by qualified personnel.

This procedure tests the following specifications:

- Output Zero Voltage
- LF Attenuation Accuracy

TEST EQUIPMENT REQUIRED

Table 7-1 lists the test equipment and accessories (or their equivalents) that are required for performance verification of the ZS1000 Probe.

This procedure has been developed to minimize the number of calibrated test instruments required.

Only the parameters listed in **boldface** in the "Minimum requirements" column must be calibrated to the accuracy indicated.

Because the input and output connector types may vary on different brands and models of test instruments, additional adapters or cables may be required.

Table 7-1. List of Required Equipment

Description	Minimum Requirements	Test Equipment Examples
Digital Oscilloscope	ProBus interface; Windows-based	LeCroy WaveRunner Xi or WaveSurfer Xs
Digital Multimeter (DMM) with test probe leads	4.5 digit **DC: 0.1% Accuracy** **AC: 0.1% accuracy**	Agilent Technologies 34401A or Fluke 8842A-09
Function Generator	Sine Wave output amplitude adjustable to 14.14 V_{p-p} (5 V_{rms}) into 1 MΩ at 70 Hz	Agilent Technologies 33120A or Stanford Research Model DS340
Power Supply	0-12 V, settable to 10 mV	HP E3611A
BNC Coaxial Cable (2 ea.)	Male to Male, 50 Ω, 36" Cable	Pomona 2249-C-36 or Pomona 5697-36
BNC Tee Connector	Male to Dual Female	Pomona 3285
Calibration Fixture	ProBus Extender Cable	LeCroy PROBUS-CF01
Terminator, Precision, BNC	50 Ω ± 0.05%	LeCroy TERM-CF01
Banana Plug Adapter (2 ea.)	Female BNC to Dual Banana Plug	Pomona 1269
BNC to Mini-grabber	BNC Male to Mini-grabber Cable, 36"	Pomona 5187-C-36

PRELIMINARY PROCEDURE

1. Connect the ZS1000 probe to the female end of the ProBus Extension Cable. Connect the male end of the ProBus Extension Cable to channel 1 of the oscilloscope.
2. Turn the oscilloscope on and allow at least 30 minutes warm-up time for the ZS1000 and test equipment before performing the Verification Procedure.
3. Turn on the other test equipment and allow these to warm up for the time recommended by the manufacturer.
4. While the instruments are reaching operating temperature, make a photocopy of the Performance Verification Test Record (located in Appendix A), and fill in the necessary data.
5. Select the channel to which the probe is connected. Set the oscilloscope scale factor to 20 mV/div.

6. Disconnect the ProBus Extender Cable from the oscilloscope. Verify that the scale factor changes from 20 mV/div to 2 mV/div.
7. Reconnect the ProBus extender Cable to the oscilloscope.

The warranted characteristics of the ZS1000 are valid at any temperature within the Environmental Characteristics listed in the Specifications. However, some of the other test equipment used to verify the performance may have environmental limitations required to meet the accuracy needed for the procedure. Make sure that the ambient conditions meet the requirements of all the test instruments used in his procedure.

Note

The correct operation of the ZS1000 controls requires software version 5.0.0.2 or higher. The software version in the test oscilloscope can be verified by selecting ***Utilities****,* ***Utilities Setup...*** *from the menu bar, then the* ***Status*** *tab.*

Contact your local LeCroy representative or visit www.lecroy.com if the software in your oscilloscope requires updating.

FUNCTIONAL CHECK

The functional check will verify the basic operation of the probe functions.

It is recommended that the Functional Check be performed prior to the Performance Verification Procedure.

1. Return to the factory default settings by:
   a. Selecting **File**, **Recall Setup...** from the menu bar.
   b. Then touching the **Recall Default** button.
3. Touch the **C1** trace label to open the **C1 Vertical Adjust** dialog.
4. Verify that the probe sensed (ZS1000) is displayed as a dialog tab.

PROCEDURE

A. Output Zero Voltage

1. Connect one end of a BNC cable to the female BNC connector on the probe end of the ProBus extender cable. Connect the precision 50 Ω terminator to the other end of the BNC cable.
2. Connect the banana plugs of the Precision terminator to the input of the DMM. Make sure that the plug corresponding to the BNC shield (marked "Ground") is connected to the **LO** or **COMMON** input of the DMM. Refer to Figure 7-1 for setup information.

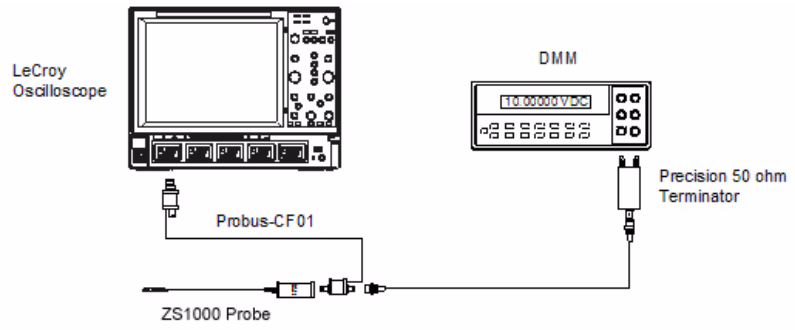

Figure 7-1. Output Zero Voltage Test Setup

3. Set the **OFFSET** on the oscilloscope to zero.
4. Set the DMM to read DC Volt on the most sensitive range.
5. Record the voltage measured on the DMM to 10 µV resolution as "Output Zero Voltage" in the Test record.
6. Check that the voltage indicated by the DMM is between ±800 µV.
7. Disconnect the DMM from the precision 50 Ω terminator. Leave the remaining setup in place for the next step.

B. LF Attenuation Accuracy

1. Disconnect the BNC tee at the power supply from the dual banana plug adapter. Connect the BNC tee to the output of the function gen-

erator. (Use a 50 Ω termination if the function generator requires such a load.) Refer to Figure 7-2.

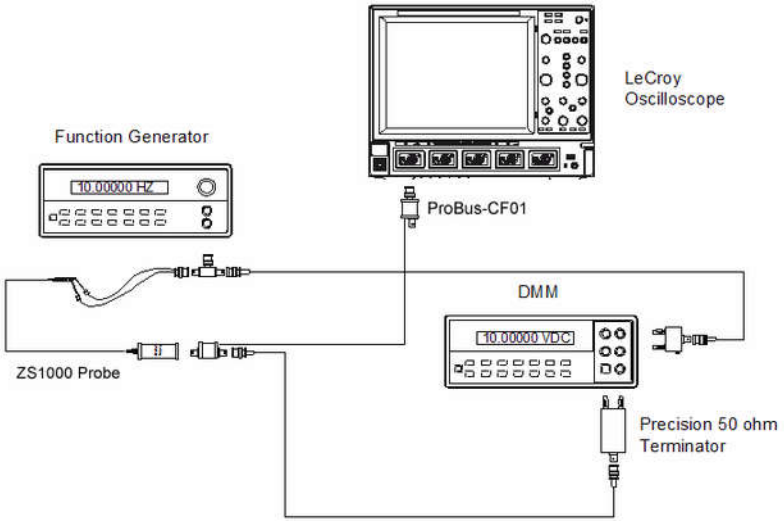

Figure 7-2. LF Attenuation Accuracy setup

2. Carefully insert the Straight Tips (supplied in accessory kit) into the sockets of the probe head. Attach the red lead of the mini-grabber to the signal input and the black lead to the ground input of the probe head.
3. Connect the BNC tee to the output of the function generator. (Use a 50 Ω termination if the function generator requires such a load).
4. Attach a BNC cable to the unused female port of the BNC tee and connect a dual banana plug adapter to the other end of the cable and plug the dual banana plug adapter into the DMM input. Make sure the side of the banana plug adapter corresponding to the BNC shield (marked "GROUND") is connected to the **LOW** or **COMMON** input of the DMM.
5. Set the DMM to read AC volt and set the range to measure 5.0 Vrms.
6. Set the mode of the function generator to sine wave, the frequency to 70 Hz and the output amplitude to 5 Vrms ±10 mV as measured on the DMM.

7. Record the output voltage to 1 mV resolution as "Generator Output Voltage" in the Test Record. Be careful not to alter the output amplitude after the reading is recorded.
8. Divide the reading recorded in step B-7 by 10 and record the result with 100 μV resolution as "Expected Output Voltage, top range" in the Test Record.
9. Remove the banana plug adapter, connected to the function generator, from the DMM and connect the precision 50 Ω terminator to the DMM, making sure that the banana plug side marked "GROUND" is connected to the **LOW** or **COMMON** input of the DMM.
10. After the DMM reading has stabilized, record the reading to 100 μV resolution as "Measured Output Voltage, top range" in the Test Record.
11. Calculate the error by dividing the measured top range output voltage recorded in step B10 by the expected top range output voltage recorded in step B-8. Subtract 1 from this ratio and multiply by 100% to get the error in percent.

$$Error = \left(\frac{Measured\ Output\ Voltage}{Expected\ Output\ Voltage} - 1 \right) \times 100\%$$

12. Record the calculated error to two decimal places (±0.xx%) as "Gain Error, top range" in the test record.
13. Verify that the error is less than ±1.0 %.
14. Disconnect the precision 50 Ω terminator from the DMM.
15. Connect the banana plug adapter connected via a BNC cable to the BNC tee at the function generator to the DMM. Verify that the side of the plug marked 'Ground' is connected to the **LOW** or **COMMON** input of the DMM.
16. Adjust the sine wave generator output amplitude to approximately 2.5 Vrms as measured on the DMM.
17. Record the reading to 1 mV resolution as "Generator Output Voltage, mid range" in the Test Record. Be careful not to alter the output

amplitude after the reading is recorded.

18. Divide the reading recorded in step B-17 by 10.
19. Record the result to 100 μV resolution as "Expected Output Voltage, mid range" in the test record.
20. Remove the banana plug adapter from the DMM and connect the precision 50 Ω terminator to the DMM, making sure that the banana plug side marked "GROUND" is connected to the **LOW** or **COMMON** input of the DMM.
21. After the DMM has stabilized, record the reading to 100 μV resolution as "Measured Output Voltage, mid range" in the Test record.
22. Calculate the error by dividing the measured mid range output voltage recorded in step B-21 by the expected mid range output voltage recorded in step B-19. Subtract 1 from this ratio and multiply by 100% to get the error in percent.

$$Error = \left(\frac{Measured\ Output\ Voltage}{Expected\ Output\ Voltage} - 1 \right) \times 100\%$$

23. Record the calculated error to two decimal places (±0.xx %) as "Gain Error, mid range" in the Test record.
24. Verify that the mid range gain error is less than ±1.0%

This completes the Performance Verification of the ZS1000. Complete and file the Test Record, as required to support your internal calibration procedure.

Apply suitable calibration label to the ZS1000 housing as required.

###

BLANK PAGE

8 Adjustment Procedure

INTRODUCTION

You can use this procedure to adjust the ZS1000 probe to meet the warranted specifications. This procedure should only be performed if the probe fails to meet the Performance verification tests for Output Zero or Offset Accuracy.

Gain which affects LF attenuation accuracy cannot be adjusted during routine calibration. Probes which fail LF frequency accuracy during performance verification must be returned to the factory for rework.

If the probe cannot be adjusted to meet the Performance verification limits, repair may be necessary.

To assure probe accuracy, check the calibration of the ZS1000 every 1000 hours or once a year if used infrequently. Before calibration, thoroughly clean and inspect the probe as outlined in the Care and Maintenance section.

To assure the probe will meet the published specifications over the entire temperature range, adjustment must be performed in a controlled ambient environment with temperature of 23 °C ±5 °C.



Caution

The adjustment procedure will require removal of the probe control circuit cover. This cover is part of the ESD protection system of the ZS1000. To protect the probe, you should perform the entire procedure on a static dissipating work surface. Wear an antistatic wrist strap and follow standard static control procedures.

TEST EQUIPMENT REQUIRED

Table 8-1 lists the test equipment and accessories (or their equivalents) that are required for complete calibration of the ZS1000 Probe. Specifications given for the test equipment are the minimum necessary for accurate calibration. All test equipment is assumed to be correctly calibrated and operating within the specification listed. Detailed operating

instructions for the test equipment are not given in this procedure. Refer to the test equipment manual if more information is needed

If alternate test equipment is substituted, control settings or calibration equipment setups may need to be altered.

Table 8-1. List of Required Equipment

Description	Minimum Requirements	Test Equipment Examples
Digital Oscilloscope	ProBus interface; Windows-based	LeCroy WaveRunner Xi or WaveSurfer Xs
Digital Multimeter (DMM) with test probe leads	4.5 digit DC: 0.1% Accuracy AC: 0.1% accuracy	Agilent Technologies 34401A or Fluke 8842A-09
Power Supply	0-12 V, settable to 10 mV	HP E3611A
BNC Coaxial Cable (2 ea.)	Male to Male, 50 Ω, 36" Cable	Pomona 2249-C-36 or Pomona 5697-36
BNC Tee Connector	Male to Dual Female	Pomona 3285
Calibration Fixture	ProBus Extender Cable	LeCroy PROBUS-CF01
Terminator, Precision, BNC	50 Ω ±0.05%	LeCroy TERM-CF01
Banana Plug Adapter (2 ea.)	Female BNC to Dual Banana Plug	Pomona 1269
BNC to Mini-grabber	BNC Male to Mini-grabber Cable, 36"	Pomona 5187-C-36

PRELIMINARY PROCEDURE

1. Remove the two screws that secure the plastic cover on the cable end of the ProBus interface housing.
2. Gently pull on the probe cable to slide the circuit board assembly from the metal housing.
3. Connect the ZS1000 probe to the female end of the ProBus extension cable, being careful to line up all six pins of the probe connector. Connect the male end of the ProBus extension cable to channel 1 of the oscilloscope.

4. Apply power to the oscilloscope and test equipment.
5. Allow at least 30 minutes warm-up time for the ZS1000 and test equipment before starting the calibration procedure.

PROCEDURE

A. Adjust Output Zero

1. Connect one end of a BNC cable to the probe end of the ProBus extension cable. Connect the Precision 50 Ω Terminator to the other end of the BNC cable.
2. Connect the banana plugs of the precision 50 Ω terminator to the input of the DMM. Make sure the plug corresponding to the BNC shield (marked 'Ground') is connected to the **LO** or **COMMON** input of the DMM. Refer to Figure 8-1 for setup information.

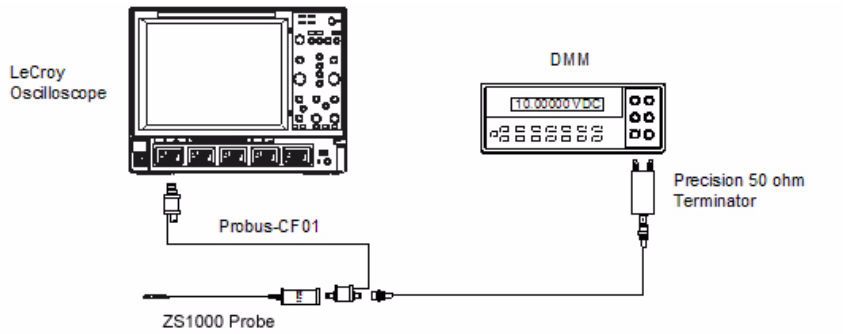

Figure 8-1. Output Zero Voltage Adjustment Setup

3. Select the channel to which the probe and ProBus extender is connected. Set **OFFSET** on the oscilloscope to zero as indicated on the on-screen display.
4. Set the DMM to read DC Volt on the most sensitive range.
5. Verify that the probe inputs are not connected to any signal.
6. Adjust **OUTPUT ZERO** on the board until the DMM reads 0 V ±100 μV. Refer to Figure 8-2 for adjustment location.

7. Disconnect the probe from the ProBus extender and re-install the circuit board into the probe case, being careful to align the ProBus interface connector with the opening on the other end of the probe.

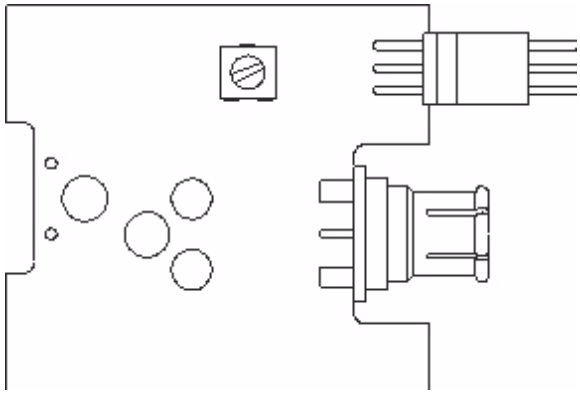

Figure 8-2. Adjustment Locations

C. Verify Calibration

Repeat the Performance Verification procedure to ensure compliance with the warranted specifications.

Apply a calibration sticker, if required, in accordance with your quality control procedures.

###

9 Specifications

NOMINAL CHARACTERISTICS

Nominal characteristics describe parameters and attributes that are guaranteed by design, but do not have associated tolerances.

Input Dynamic range	±8 V
Maximum Input Voltage	20 V[1]
Intended Output Load	50 Ω
Attenuation	÷10
Output Connector	ProBus
Interface	ProBus
Oscilloscope Full Compatibility	LeCroy oscilloscope with firmware version 5.0.0.2 or later

[1] Subject to input voltage vs. frequency derating. See Figure 9-1.

WARRANTED CHARACTERISTICS

Warranted characteristics are parameters with guaranteed performance. Unless otherwise noted, tests are provided in the Performance Verification Procedure for all warranted specifications.

Low Frequency Attenuation Accuracy	±0.50% plus uncertainty of 50 Ω termination
Output Zero	±2 mV, referred to the input

TYPICAL CHARACTERISTICS

Typical characteristics are parameters with no guaranteed performance. Tests for typical characteristics are not provided in the Performance Verification Procedure.

Bandwidth (Probe only)	1 GHz
Input Capacitance	0.9 pF
DC Input Resistance	1 MΩ

ENVIRONMENTAL CHARACTERISTICS

Temperature, warranted	15 to 35 °C
Temperature, operating	0 °C to 50 °C
Temperature, non-operating	-40 °C to 71 °C
Relative Humidity	80% max. up to 31 °C, decreasing linearly to 45% max. at 50 °C
Altitude	up to 2000 m

PHYSICAL CHARACTERISTICS

Probe Head Size:	
Length	61 mm (2.4 in.)
Width	7.3 mm (0.29 in.)
Height	13.1 mm (0.52 in.)
Cable Length	1.3 m (51.1 in.)
Weight:	
Probe only	100 g (3.5 oz.)
Shipping	0.85 kg (1.87 lbs.)
Input Sockets	Signal and ground sockets are compatible with 0.635 mm (0.025 in) square pins, and 0.91 mm (0.036 in) maximum diameter round pins

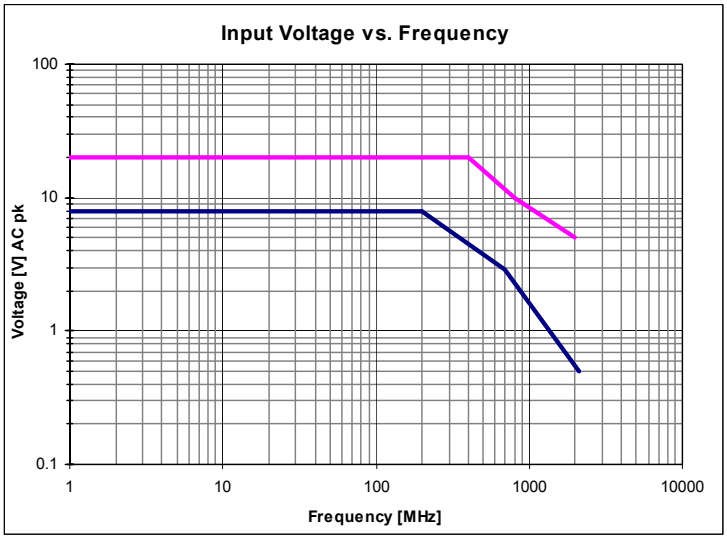

Figure 9-1. Input Voltage vs. Frequency

COMPLIANCE AND CERTIFICATIONS

CE Declaration of Conformity

Low Voltage Directive:	EN 61010-2-031:2002 Safety requirements for electrical equipment for measurement control and laboratory use. Part 031: Particular requirements for hand-held probe assemblies for electrical measurement and test.
EMC Directive:	EN 61326/A3:2003 EMC requirements for electrical equipment for measurement control and laboratory use.

Electromagnetic Emissions: EN 55011/A2:2002 Class A Radiated Emissions.

Electromagnetic Immunity: EN 61000-4-2/A2:2001 Electrostatic Discharge.
(Air/Contact Discharge: 4 kV)

EN 61000-4-3/A1:2003
RF Radiated Electromagnetic Field
(80 MHz to 1 GHz; 3 V/m)

	有毒有害物质和元素					
部件名称	铅 (Pb)	汞 (Hg)	镉 (Cd)	六价铬 (Cr^{6+})	多溴联苯 (PBB)	多溴二苯醚 (PBDE)
PCBAs	X	O	X	X	X	X
机械硬件	O	O	X	O	O	O
金属片	O	O	X	O	O	O
塑料部件	O	O	O	O	X	X
保护外壳	O	O	O	O	X	X
电缆组件	X	O	X	O	X	X
探头端部	X	O	X	O	X	X
O: 表明该有毒有害物质在该部件所有均质材料中的含量均在 SJ/T11363-2006 标准规定的限量要求之下。						
X: 表明该有毒有害物质至少在该部件的某一均质材料中的含量均在 SJ/T11363-2006 标准规定的限量要求。						

EFUP (对环境友好的使用时间) 使用条件：参阅本手册“规范”部分规定的环境条件。

Part Name	Toxic or Hazardous Substances and Elements					
	Lead (Pb)	Mercury (Hg)	Cadmium (Cd)	Hexavalent Chromium (Cr^{6+})	Polybrominated Biphenyls (PBB)	Polybrominated Diphenyl Ethers (PBDE)
PCBAs	X	O	X	X	X	X
Mechanical Hardware	O	O	X	O	O	O
Sheet Metal	O	O	X	O	O	O
Plastic Parts	O	O	O	O	X	X
Protective Case	O	O	O	O	X	X
Cable Assemblies	X	O	X	O	X	X
Probe Tips	X	O	X	O	X	X

O: Indicates that this toxic or hazardous substance contained in all of the homogeneous materials for this part is below the limit requirement specified in SJ/T11363-2006.
X: Indicates that this toxic or hazardous substance contained in at least one of the homogenous materials used for this part is above the limit requirement specified in SJ/T11363-2006.

EFUP (Environmental Friendly Use Period) Use Conditions: refer to the environmental conditions stated in the specifications section of this Manual.

###

BLANK PAGE

Appendix A

PERFORMANCE VERIFICATION TEST RECORD

This record can be used to record the results of measurements made during the performance verification of the ZS1000 High Impedance Active Probe.

Photocopy this page and record the results on the copy. File the completed record as required by applicable internal quality procedures.

The section in the test record corresponds to the parameters tested in the performance verification procedure. The numbers preceding the individual data records correspond to the steps in the procedure that require the recording of data. Results to be recorded in the column labeled “Test Result” are the actual specification limit check. The test limits are included in all of these steps. Other measurements and the results of intermediate calculations that support the limit check are to be recorded in the column labeled “Intermediate Results”.

Permission is granted to reproduce these pages for the purpose of recording test results.

Probe Model: ZS1000_____

Serial Number: _____

Asset or Tracking Number: _____

Date: _____

Technician: _____

ZS1000 High Impedance Active Probe

EQUIPMENT USED:

	MODEL	SERIAL NUMBER	CALIBRATION DUE DATE
OSCILLOSCOPE			
DIGITAL MULTIMETER			
FUNCTION GENERATOR[1]			**N/A**

[1]The function generator used in this Performance Verification Procedure is used for making relative measurements. The output of the generator is measured with a DMM or oscilloscope in this procedure. Thus, the generator is not required to be calibrated.

ZS1000 TEST RECORD

Step **Description** **Intermediate data**
Test Result

Output Zero Voltage

A-5 **Output Zero Voltage** (Test limit ≤ ±800 µV)_____ V

LF Attenuation Accuracy

B-7 Generator Output Voltage _____ V

B-8 Expected Output Voltage, top range _____ V

B-10 Measured Output Voltage, top range _____ V

B-12 **Gain Error**, top range (Test limit ≤ ±1.0%) _____%

B-17 Generator Output Voltage _____ V

B-19 Expected Output Voltage, mid range _____ V

B-21 Measured Output Voltage, mid range _____ V

B-23 **Gain Error**, mid range (Test limit ≤ ±1.0%) _____%

###

Notes

Notes