LUS211-40-51-LI2UPN8-H1141
Ultrasonic Sensor – Level Control

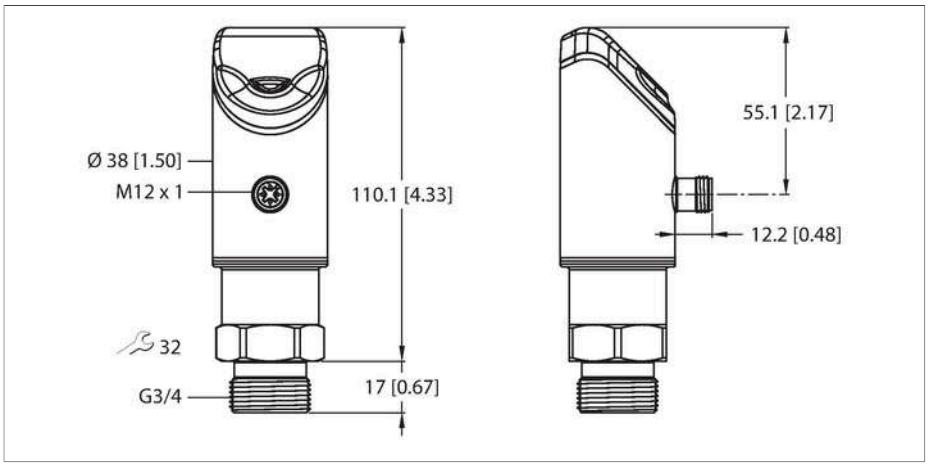



Technical data

Type	LUS211-40-51-LI2UPN8-H1141
Ident. no.	100003167
Ultrasonic data	
Function	Ultrasonic diffuse mode sensor
Range	5…400 mm
Resolution	0.5 mm
Minimum measuring range	50 mm
Minimum switching range	5 mm
Ultrasound frequency	320 kHz
Temperature drift	± 1.5 % of full scale
Edge lengths of the nominal actuator	20 mm
Approach speed	≤ 3 m/s
Pass speed	≤ 1.3 m/s
Electrical data	
Operating voltage	17…33 VDC
No-load current	≤ 150 mA
Load resistance	≤ 1000 Ω
Residual current	≤ 0.1 mA
Response time typical	< 60 ms
Readiness delay	≤ 300 ms
Communication protocol	IO-Link
Output function	NO/NC, PNP/NPN, analog output
Output 1	Switching output or IO-Link mode
Output 2	Analog output
Current output	4…20 mA
Load resistance, current output	≤ 0.5 kΩ

Features

- 4-digit, two-colored, 14-segment display, rotatable by 180°
- Housing is rotatable after plugging the process connection
- Process connection G3/4"
- Sealing ring included in delivery (stainless steel ring with NBR seal)
- Blind zone: 0.5 cm
- Range: 40 cm
- Resolution: 0.5 mm
- Cone angle of sonic cone: 15°
- 1 × switching output, PNP/NPN
- 1 × analog output, 4…20 mA / 0…10 V / additional switching output, PNP/NPN
- NO/NC programmable
- Transmission of process value and parametrization via IO-link

Wiring diagram

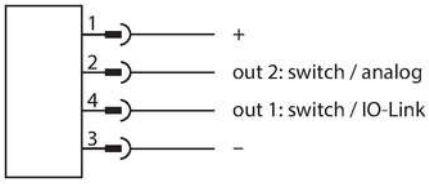

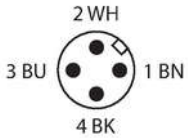

Functional principle

Ultrasonic sensors capture a multitude of objects contactlessly and wear-free with ultrasonic waves. It does not matter whether the object is transparent or opaque, metallic

LUS211-40-51-LI2UPN8-H1141| 20-01-2021 14-02 | Technical modifications reserved

Technical data

Voltage output	0…10 V
Load resistance voltage output	≥ 8 kΩ
Switching frequency	≤ 5 Hz
Hysteresis	≤ 50 mm
Voltage drop at I_e	≤ 2.5 V
Short-circuit protection	yes
Reverse polarity protection	yes
Setting option	Capacitive Sensor IO-Link
IO-Link	
IO-Link specification	V 1.1
IO-Link port type	Class A
Communication mode	COM 2 (38.4 kBaud)
Process data width	32 bit
Measured value information	15 bit
Switchpoint information	4 bit
Frame type	2.2
Minimum cycle time	5 ms
Function Pin 4	IO-Link
Function Pin 2	DI
Maximum cable length	20 m
Profile support	Smart Sensor Profil
Included in the SIDI GSDML	Yes
Mechanical data	
Design	Smooth barrel, LUS
Radiation direction	straight
Dimensions	Ø 38 x 127.1 mm
Housing material	Stainless-steel/Plastic, 1.4404 (AISI 316L)/Grilamid TR90 UV PA
Transducer material	Plastic, Epoxyd resin and PU foam
Electrical connection	Connectors, M12 × 1, 4-wire
Process connection	G 3/4"
Ambient temperature	-25…+70 °C
Protection class	IP67 IP69K
	Not assessed by UL
Tests/approvals	
Declaration of conformity EN ISO/IEC	EN 60947-5-7

or non-metallic, firm, liquid or powdery. Even environmental conditions such as spray, dust or rain hardly affect their function.
The sonic cone diagram indicates the detection range of the sensor. In accordance with standard EN 60947-5-7, quadratic targets in a range of sizes (20 × 20 mm, 100 × 100 mm) and a round rod with a diameter of 27 mm are used.
Important: The detection ranges for other targets may differ from those for standard targets due to the different reflection properties and geometries.

Sonic Cone

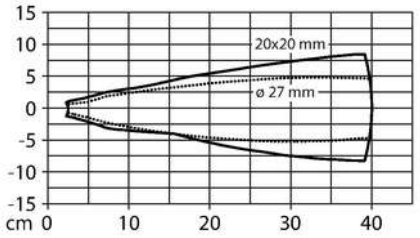

LUS211-40-51-LI2UPN8-H1141| 20-01-2021 14-02 | Technical modifications reserved

Mounting instructions

Mounting instructions/Description

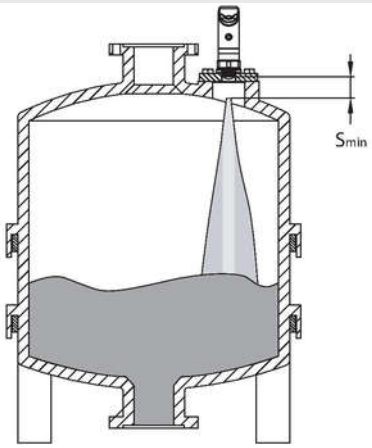

LUS211-40-51-LI2UPN8-H1141| 20-01-2021 14-02 | Technical modifications reserved

Accessories

Dimension drawing	Type	Ident. no.	
	RKC4.4T-2/TEL	6625013	Connection cable, female M12, straight, 4-pin, cable length: 2 m, sheath material: PVC, black; cULus approval; other cable lengths and qualities available, see www.turck.com
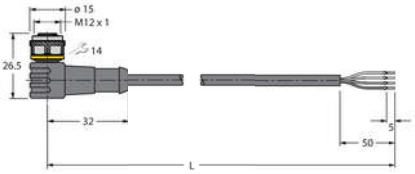	WKC4.4T-2/TEL	6625025	Connection cable, female M12, angled, 4-pin, cable length: 2 m, sheath material: PVC, black; cULus approval; other cable lengths and qualities available, see www.turck.com
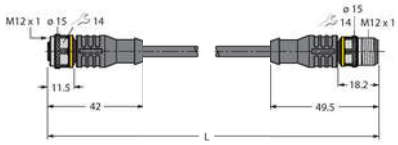	RKC4.4T-2-RSC4.4T/TEL	6625208	Connection cable, M12 female plug, straight, 4-pin, cable length: 2 m, sheath material: PVC, black; cULus approval; other cable lengths and qualities available, see www.turck.com

Accessories

Dimension drawing	Type	Ident. no.	
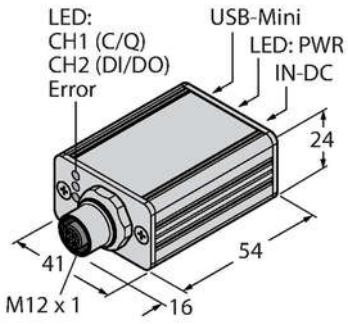	USB-2-IOL-0002	6825482	IO-Link Master with integrated USB port
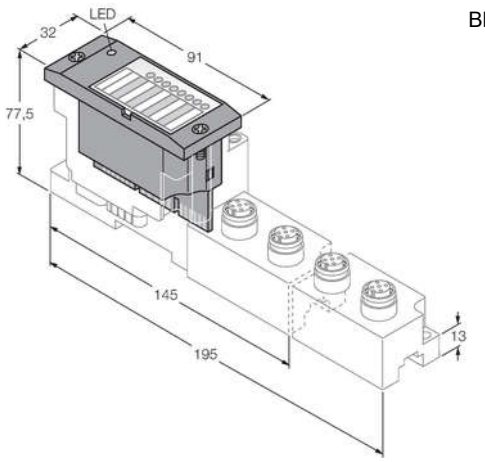	BL67-4IOL	6827386	4-channel IO-Link Master module for the modular BL67 I/O-system

LUS211-40-51-LI2UPN8-H1141| 20-01-2021 14-02 | Technical modifications reserved

Dimension drawing	Type	Ident. no.	
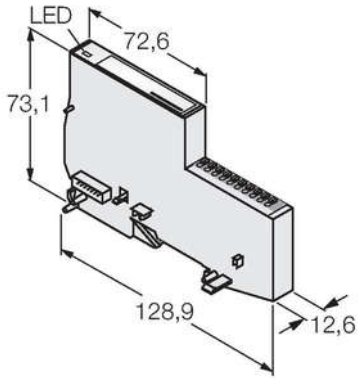	BL20-E-4IOL	6827385	IO-Link master module for the modular BL20 I/O system, 4-channel
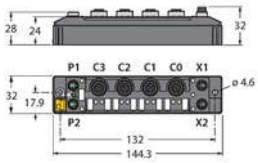	TBEN-S2-4IOL	6814024	Compact multiprotocol I/O module, 4 IO-Link Master 1.1 Class A, 4 universal PNP digital channels 0.5 A
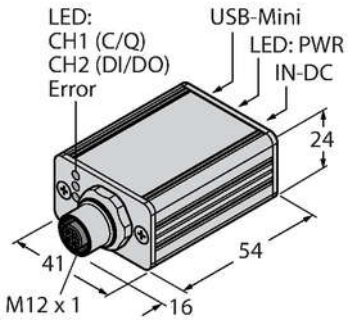	USB-2-IOL-0002/D845	Kopie von 6825482	IO-Link Master with integrated USB port

LUS211-40-51-LI2UPN8-H1141| 20-01-2021 14-02 | Technical modifications reserved