

## Model Number

**UBE800-F77-SE2-V31**

Through-beam ultrasonic barrier

## Features

- **Miniature design**
- **Highly visible LEDs for Power ON and switching state**
- **High switching frequency**
- **Program input**
- **Protection degree IP67**

## Technical data

| | |
|---|---|
| **General specifications** | |
| Sensing range | 0 ... 800 mm emitter/receiver spacing |
| Standard target plate | see table |
| Transducer frequency | approx. 300 kHz |
| **Nominal ratings** | |
| Time delay before availability $t_v$ | ≤ 150 ms |
| **Limit data** | |
| Permissible cable length | max. 300 m |
| **Indicators/operating means** | |
| LED green | Power on ( emitter ) |
| LED yellow | switching state ( receiver ) |
| **Electrical specifications** | |
| Rated operational voltage $U_e$ | 24 V DC |
| Operating voltage $U_B$ | 20 ... 30 V DC , ripple 10 $\%_{SS}$ ; 12 ... 20 V DC reduced sensitivity by 80 % |
| No-load supply current $I_0$ | ≤ 20 mA |
| **Input** | |
| Input type | 1 program input (receiver) |
| Level | low level : 0 ... 0.7 V ; high level : > 14 V |
| Input impedance | 16 kΩ |
| Pulse length | ≥ 3 s |
| **Output** | |
| Output type | 1 switch output PNP, NO |
| Rated operational current $I_e$ | 200 mA , short-circuit/overload protected |
| Voltage drop $U_d$ | ≤ 2 V |
| Switch-on delay $t_{on}$ | ≤ 5 ms |
| Switching frequency f | 100 Hz |
| Off-state current $I_r$ | ≤ 0.01 mA |
| **Ambient conditions** | |
| Ambient temperature | -25 ... 70 °C (-13 ... 158 °F) |
| Storage temperature | -40 ... 85 °C (-40 ... 185 °F) |
| Shock resistance | 30 g , 11 ms period |
| Vibration resistance | 10 ... 55 Hz , Amplitude ± 1 mm |
| **Mechanical specifications** | |
| Connection type | M8 x 1 connector , 4-pin |
| Protection degree | IP67 |
| Material | |
| Housing | Polycarbonate |
| Transducer | epoxy resin/hollow glass sphere mixture; polyurethane foam |
| Installation position | any position |
| Mass | Per 10 g |
| Tightening torque, fastening screws | max. 0.2 Nm |
| **Compliance with standards and directives** | |
| Standard conformity | |
| Standards | EN 60947-5-2:2007<br>IEC 60947-5-2:2007 |
| **Approvals and certificates** | |
| UL approval | cULus Listed, General Purpose |
| CSA approval | cCSAus Listed, General Purpose |

Release date: 2012-04-11 15:28 Date of issue: 2012-04-11 233248_eng.xml

Subject to reasonable modifications due to technical advances. Copyright Pepperl+Fuchs, Printed in Germany

## Dimensions

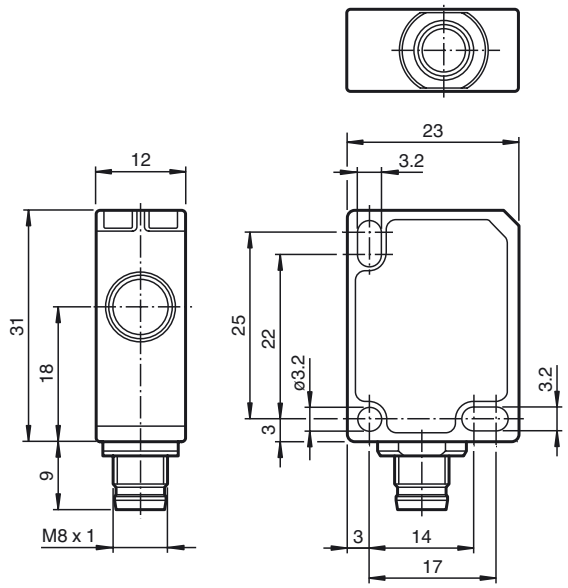


## Electrical Connection

Receiver:

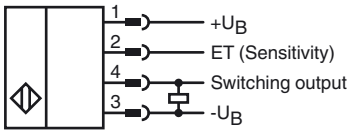


Emitter:

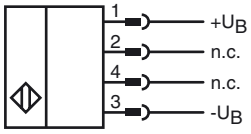


## Pinout




Release date: 2012-04-11 15:28 Date of issue: 2012-04-11 233248_eng.xml


Subject to reasonable modifications due to technical advances.
Copyright Pepperl+Fuchs, Printed in Germany
Pepperl+Fuchs Group • Tel.: Germany +49 621 776-0 • USA +1 330 4253555 • Singapore +65 67799091 • Internet http://www.pepperl-fuchs.com

Wire colors in accordance with EN 60947-5-2

| | | |
|---|---|---|
| 1 | BN | (brown) |
| 2 | WH | (white) |
| 3 | BU | (blue) |
| 4 | BK | (black) |

## Accessories

**UB-PROG4-V31**
Programming unit

**OMH-ML7-01**
Mounting bracket

**V31-GM-2M-PVC**
M8, 4-pin socket, PVC cable

**V31-WM-2M-PVC**
M8, 4-pin socket, PVC cable

### Description of Sensor Function

An ultrasonic thru-beam sensor always consists of an ultrasonic emitter and receiver. The working principle of the ultrasonic thru-beam sensor is based on the interruption of the transmission from the emitter to the receiver by the object to be detected (obstacle).

The emitter produces an ultrasonic signal which is evaluated by the receiver. If the signal is damped or broken by the object being detected, the receiver switches state.

No electrical connections are required between the emitter and receiver.

### Sensitivity adjustment

The sensitivity is adjusted using the input ET. This can be open or connected using $+U_B$ or $-U_B$.

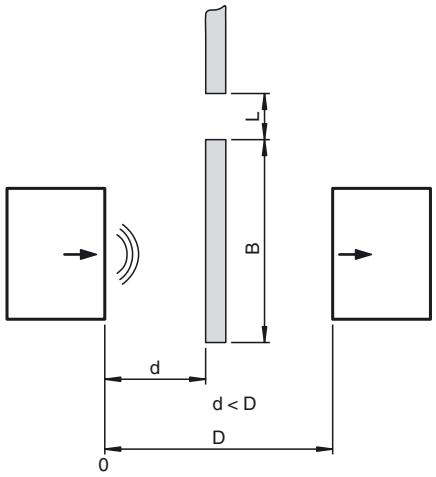


| ET | Sensitivity | D | B(1) | L(1) |
|---|---|---|---|---|
| Open | High | ≤ 800 mm | ≥ 50 mm | ≥ 15 mm |
| $-U_B$ | Medium | ≤ 600 mm | ≥ 40 mm | ≥ 10 mm |
| $+U_B$ | Low | ≤ 400 mm | ≥ 30 mm | ≥ 5 mm |

(1) The specified values for B and L are reference values and refer to the maximum distance D and to objects with a rectangular shape. The shape of the objects can have an effect on the values for B and L.

### Safety Note

The use of this device in applications, where the safety of persons depends from the devices function, is not allowed!

Release date: 2012-04-11 15:28 Date of issue: 2012-04-11 233248_eng.xml

Subject to reasonable modifications due to technical advances. Copyright Pepperl+Fuchs, Printed in Germany