SKF ball bearing units – UC range 200 and 300 series

Japanese Industrial Standards compliant ball bearing units



Solid design, solid benefits

In order to meet the industry's demands of improved protection against contaminant ingress, better shaft balance and locking strength, we have now developed a new range of ball bearing units – the UC range.

These bearing units offer optimized protection against contaminants as well as better resistance against washdowns. In addition, the units of the 200 series are designed with a 120° grub screw angle locking system to operate reliably in applications where good shaft balance is needed and where systemic vibration is a characteristic application condition.

Easy to order, easy to replace

You want a solution that makes your life easy – a solution with interchangeable boundary dimensions, housing configurations and part numbers. The UC range ball bearing units achieve this and more. It's compatible with JIS* housings available today on the market. No modification of your machine is needed. The dimensions meet most of the current UC designated bearing unit fitting requirements. And whatever product you need, with SKF you know it will be easy to obtain, straightforward to install and manufactured to SKF quality levels.

* JIS: Japanese Industrial Standards





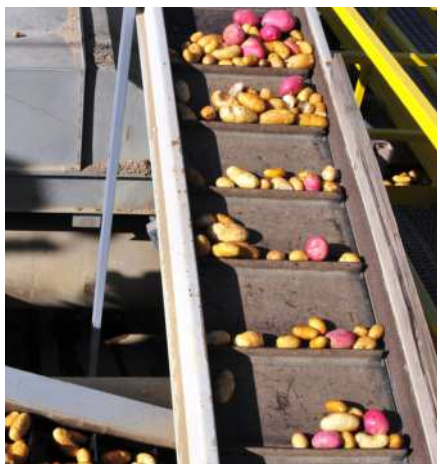

Main applications include

- Material handling conveyors
- Agriculture machinery
- Food & beverage machinery
- Packaging equipment
- Fitness equipment
- Air handling

Other industries

- Textile machinery
- Construction machinery
- Escalators
- Metal industry

Fig. 1

UC bearing unit, 200 series

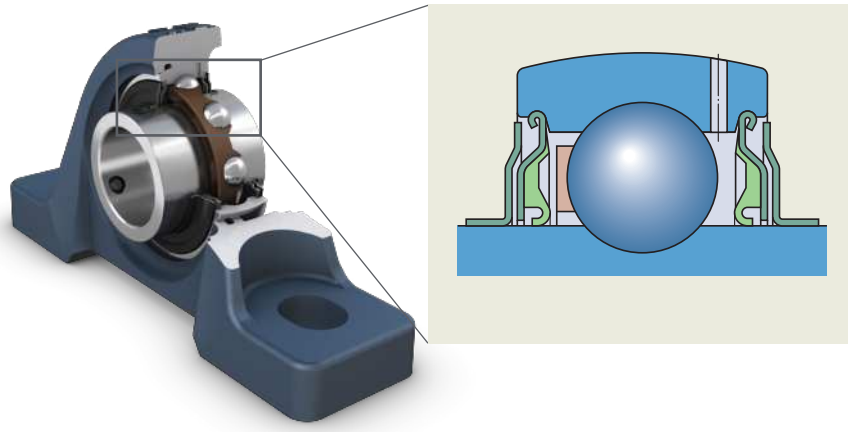

Sealing system

SKF has cascaded its extensive field proven sealing experience to this new product range. The sealing system consists of an integral single-lip inner seal and an external flinger fitted on the inner ring (**fig 1**). This additional barrier acting as a deflector, together with the seal, improves bearing protection against the ingress of contaminants. Comparative tests of contaminant and washdown resistance show that SKF units perform better than comparable competitor products (**diagrams 1** and **2**).

Solid design for increased cleanliness

The solid base design provides a smooth surface to avoid the harboring of contaminants, especially in contaminated conveyor operating environments. The solid design also limits the risk of dirt collecting underneath the housing support and improves resistance to vibration.

To help comply with health and safety regulations, UC bearing units of the 200 series with flanged and take-up housings are available with hydrophobic polypropylene end covers. We offer these end covers as a high availability option.

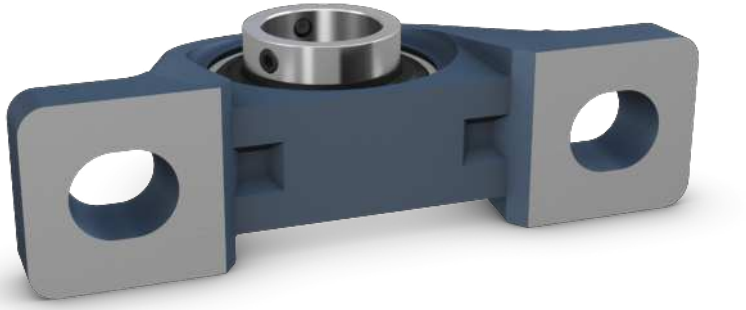

Diagram 1

Contaminant resistance, mud test (hours)

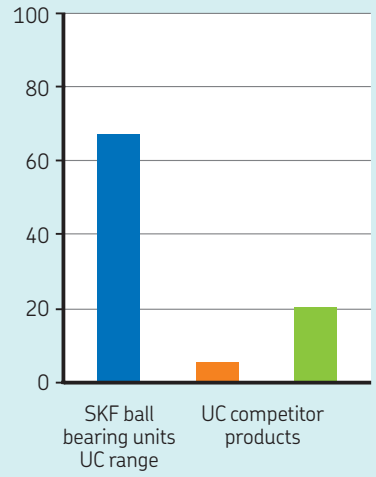

Diagram 2

Washdown resistance (score)

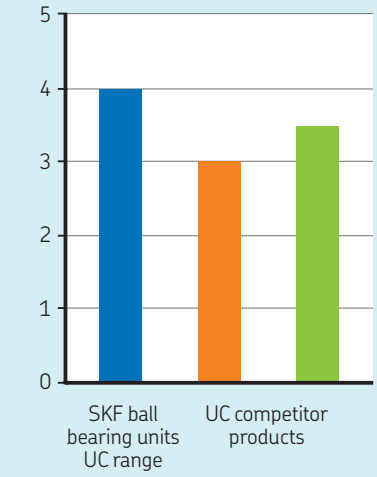

Diagram 3

Axial holding power – grub screws (kN/Nm)

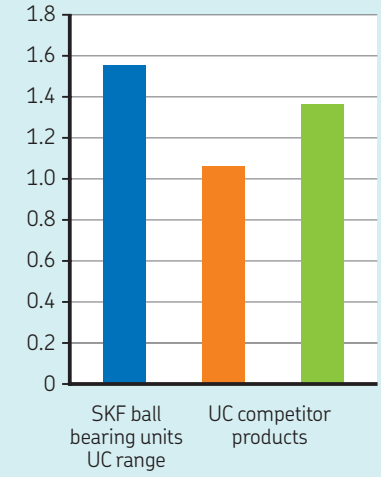

Fig. 2

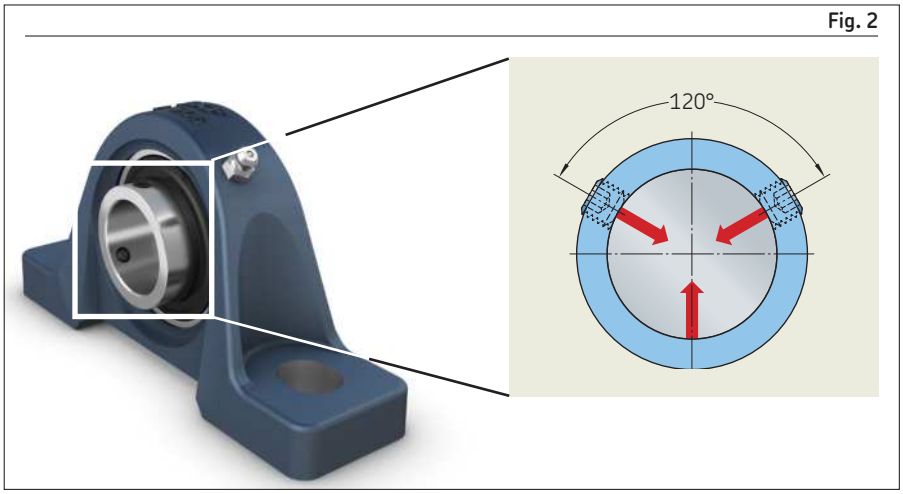



Please note that end covers are not included with the SKF ball bearing units and must be ordered separately.

Better balance with a 120° [1] locking screw angle

One of the most frequent causes for ball bearing unit failures in high speed applications is shaft imbalance and vibration loosening the locking system. Designing the UC range of the 200 series with a grub screw angle of 120° not only improves balance at high speed, it also reduces deformation of the bearing when locking. For distribution of the forces acting on the shaft (**fig 2**).

A test of the axial holding power of the grub screw showed that the SKF locking system performed better than our competitors' equivalent offers (**diagram 3**, **page 3**).

1) Valid up to bore diameter 65 mm, for larger diameter shaft applications and for the 300 series characterized by higher peak loads and lower rotational speeds, the ball bearing unit features a grub screw angle of 62°

SKF high-quality grease

Poor lubrication accounts for over 36% of premature bearing failures. In fact, most low speed applications fail due to lubrication related issues, not necessarily due to bearing fatigue. Provided that recommended maintenance intervals are followed, SKF high-quality grease helps bearings achieve expected service life as the SKF lubricants are designed to perform under real conditions (**table 1**).

Table 1

Lubricating greases

Technical specification	**Grease fills in** standard ball bearings standard ball bearing units
Thickener	Lithium-calcium soap
Base oil	Mineral oil
Colour	Yellowish brown
Temperature range [°C] (continuous operation)	–30 to +120[1)]
Kinematic viscosity [mm²/s]	190/15
Consistency (to NLGI scale)	2
Other	Long life grease

1) The temperature range for reliable operation in accordance with the SKF traffic light concept is between 10 and 120 °C.

Your benefits at a glance

SKF understands machine and plant productivity and the need to deliver high rotating equipment performance. The UC range has been designed to provide reliable performance as well as reduce machine downtime. It includes specific features that can make the difference in your equipment:

- Interchangeable with JIS housing
- Full range assortment
- Shorter lead times with available local stock
- 120° grub screw angle for the 200 series – better balance at high speed and less deformation when locking
- 62° grub screw angle for the 300 series – better holding power for high peak load and low speed
- Robust design reducing contaminant ingress and vibration
- Enhanced washdown resistance

Designations

The complete designation for the SKF ball bearing units – UC range consists of:

- Prefixes, identifying ball bearing housing type
- Figures, identifying the size
- Suffixes, identifying design and variants

More details about the basic designations and the supplementary designations can be obtained from the table **Designation system.**

SKF's global distribution network – always close to you

Finding replacement parts can sometimes be a challenge. SKF is well positioned to bring you the right support and the right parts, no matter where your application is based. We have 17,000 distribution locations in over 130 countries around the globe, which, together with our distribution partners, help us achieve industry leading product availability.

Designation system

Examples: UCFL 204/H — UC FL 2 04 /H
UCP 316 — UC P 3 16

Bearing series

UC	Insert bearing with grub screws
UK[1]	Insert bearing with a tapered bore and adapter sleeve

Housing type

P	Pillow block unit
F	Flanged unit, square 4-bolt flange
FL	Flanged unit, oval 2-bolt flange
FC	Flanged unit, round 4-bolt flange
T	Take-up unit for linear motion
FB	Flanged unit, 3-bolt bracket flange
PA	Short base pillow block unit

Dimension series

2	Normal series
3	Heavy duty series

Bore diameter

For metric shaft

04	20 mm
to	to
18	90 mm

Suffixes

/H	Higher contamination resistance compared to standard and also specifically for UC, higher stability and better load balance than standard with 120° grub screw angle instead of 62°.
K	Without adapter sleeve

[1] Order adapter sleeve separately.

Technical specifications

Dimensions and tolerances	Ball bearings UC type according to ISO 9628:2006 Ball bearings UK type according to JIS B 1558:1995, with tapered bore 1:12 Adapter sleeve for UK type H23 series according to ISO 2982-1:1995 Housings according to JIS B 1559:1995	
Bearing radial internal clearance	Ball bearings UC type with cylindrical bore according to Group N (CN) ISO 9628:2006 Ball bearings UK type with tapered bore according to Group 3 (C3) ISO 9628:2006	
Recommended fits and shaft tolerances	Ball bearings UC type with cylindrical bore:	• for P > 0,05 C and/or high speeds → h6 • for 0,035 C < P ≤ 0,05 C → h7 • for 0,02 C < P ≤ 0,035 C and/or low speeds → h8 • simple bearing arrangements or P ≤ 0,02 C → h9 – h11
	Ball bearings UK type with tapered bore:	• for all loads and speeds → h9/IT5
Rotation limiting speed	Please refer to the technical tables enclosed	
Permissible misalignment	Up to 5° when lubrication is not required Up to 2° when lubrication is required	
Lubrication and maintenance	Standard grease characteristics, please refer to **Table 1** Bearing relubrication is not required if:	• loads and speeds are moderate • vibration does not occur • operating temperatures are between 40 and 55 °C

Insert bearings with set screws, metric shafts

d **30 – 100** mm

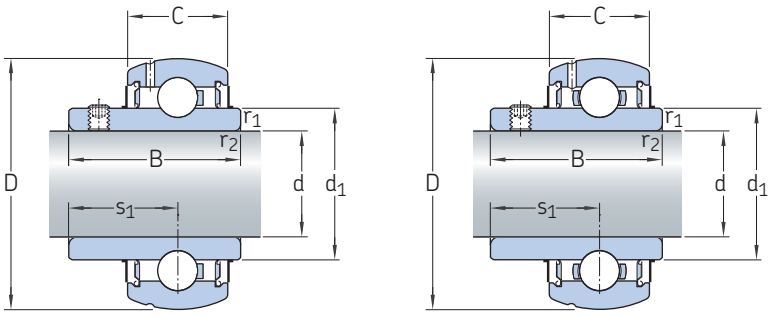

Pressed steel cage

Dimensions							Basic load ratings dynamic	static	Fatigue load limit	Limiting speed with shaft tolerance	Mass	Designation
d	D	B	C	d_1	s_1	$r_{1,2}$ min.	C	C_0	P_u	h6		
mm							kN		kN	r/min	kg	–
30	72	43	21	44,8	26	2	26,5	15,0	0,6	5 300	0,54	**UC 306**
35	80	48	23	50,4	29	2,5	33,2	19,3	0,8	4 700	0,71	**UC 307**
40	90	52	25	56,5	33	2,5	41,0	24,0	1,0	4 200	0,96	**UC 308**
45	100	57	29	63	35	2,5	52,7	32,0	1,3	3 750	1,3	**UC 309**
50	110	61	30	69,1	39	3	61,8	38,0	1,6	3 400	1,7	**UC 310**
55	120	66	32	76,1	41	3	71,5	45,0	1,9	3 100	2,1	**UC 311**
60	130	71	35	81,7	45	3,5	81,9	52,0	2,2	2 900	2,6	**UC 312**
75	160	82	43	101,3	50	3,5	114	76,5	3,0	2 300	4,7	**UC 315**
80	170	86	44	107,9	52	3,5	124	86,5	3,3	2 150	5,5	**UC 316**
100	215	108	54	135,5	66	4,5	174	140,0	4,8	1 700	10,9	**UC 320**

Insert bearings with set screws, inch shafts

d **3 – 4** in.

76,2 – 101,6 mm

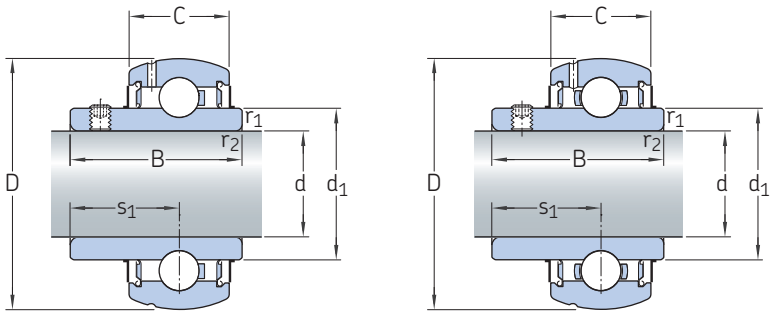

Pressed steel cage

Dimensions							Basic load ratings dynamic	static	Fatigue load limit	Limiting speed with shaft tolerance	Mass	Designation
d	D	B	C	d_1	s_1	$r_{1,2}$ min.	C	C_0	P_u	h6		
in/*mm*							kN		kN	r/min	kg	–
3 *76,2*	160	82	43	101,3	50	3,5	114	76,5	3	2 300	4,55	**UC 315-48**
4 *101,6*	215	108	54	135,5	66	4,5	174	140	4,75	1 700	10,7	**UC 320-64**

Pillow block ball bearing units, grub screw locking, metric shafts

d **20 – 100** mm

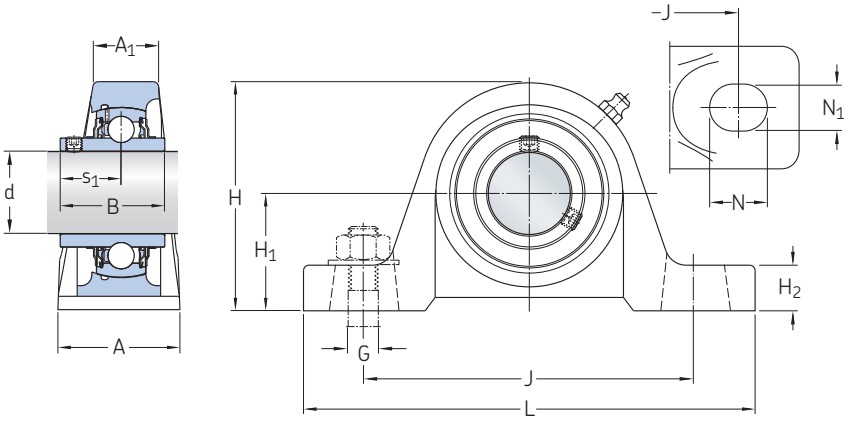

UCP 204/H to UCP 213/H

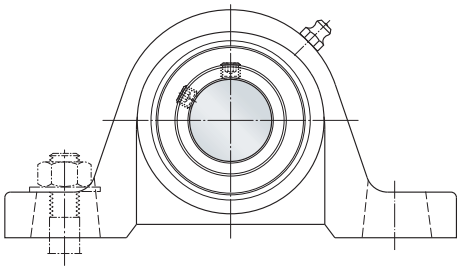

UCP 214 to UCP 218
UCP 306 to UCP 320

Principal dimensions			Basic load ratings dynamic	static	Fatigue load limit	Limiting speed with shaft tolerance h6	Mass	Designations
d	H_1	J	C	C_0	P_u			
mm			kN			r/min	kg	–
20	33,3	95	12,7	6,55	0,28	6 500	0,6	**UCP 204/H**
25	36,5	105	14	7,8	0,335	5 850	0,76	**UCP 205/H**
30	42,9	121	19,5	11,2	0,475	5 000	1,2	**UCP 206/H**
	50	140	26,5	15	0,64	5 300	2,15	**UCP 306**
35	47,6	127	25,5	15,3	0,655	4 300	1,5	**UCP 207/H**
	56	160,5	33,2	19,3	0,815	4 700	3	**UCP 307**
40	49,2	137	30,7	19	0,8	3 750	2	**UCP 208/H**
	60	170,5	41	24	1,02	4 200	3,6	**UCP 308**
45	54	146	33,2	21,6	0,915	3 400	2,2	**UCP 209/H**
	67	190	52,7	32	1,34	3 750	5,05	**UCP 309**
50	57,2	159	35,1	23,2	0,98	3 300	2,7	**UCP 210/H**
	75	212,5	61,8	38	1,6	3 400	6,5	**UCP 310**
55	63,5	171	43,6	29	1,25	3 000	3,55	**UCP 211/H**
	80	236,5	71,5	45	1,9	3 100	7,8	**UCP 311**
60	69,8	184	52,7	36	1,53	2 700	4,55	**UCP 212/H**
	85	250,5	81,9	52	2,2	2 900	9,75	**UCP 312**
65	76,2	203	57,2	40	1,7	2 350	6,25	**UCP 213/H**
70	79,4	210	62,4	45	1,86	2 250	6,8	**UCP 214**
75	82,6	217	66,3	49	2,04	2 100	7,3	**UCP 215**
	100	290,5	114	76,5	3	2 300	15,5	**UCP 315**
80	88,9	232	71,5	54	2,2	1 900	9,45	**UCP 216**
	106	300,5	124	86,5	3,25	2 150	18,2	**UCP 316**
85	95,2	247	83,2	64,0	2,5	1 800	12,9	**UCP 217**
90	101,6	262	95,6	72	2,7	1 600	14,1	**UCP 218**
100	140	380,5	174	140	4,75	1 700	36,7	**UCP 320**

Dimensions

d	A	A_1	B	H	H_2	L	N	N_1	G	s_1
mm										
20	34	21	31	64,5	13,5	127	18	13	10	18,3
25	38	22	34,1	70,5	16	139,5	18	13	10	19,8
30	45 47	24 32	38,1 43	83,5 100	16,5 21	165 182	21 19	17 17	14 14	22,2 26
35	46 54	27 36	42,9 48	93,5 111,5	18,5 23	166,5 209	21 24,5	17 17	14 14	25,4 29
40	49 57	29 38	49,2 52	101 119,5	20,5 25	184 221	21 26,5	17 17	14 14	30,2 33
45	51 63	29 42	49,2 57	108 136	19 25	189,5 247	21 29	17 20	14 16	30,2 35
50	56 65	31 43	51,6 61	116 152	19 25	206,5 275	22 34,5	20 20	16 16	32,6 39
55	59 68	35 45	55,6 66	126 162	22 25	219 302	22 37,5	20 20	16 16	33,4 41
60	62 72	36 48	65,1 71	141,5 171	22 35	239,5 321	25 36,5	20 24	16 20	39,7 45
65	72	35	68,3	153,5	25,5	265	30	25	20	42,9
70	72	41	69,9	159,5	28	266	30	25	20	39,7
75	73 86	42 58	77,8 82	164 202	25,5 40	271,5 368	30 39,5	25 27	20 22	44,5 50
80	78 93	45 62	82,6 86	176 215	32,5 40	292 378	35 39,5	25 27	20 22	49,3 52
85	83,2	47,6	85,7	188,91	36	310,36	35	25	M20	51,6
90	88	51	96	202,5	36,5	327	40	27	22	56,3
100	107	71	108	283	55	482	49,5	36	30	66

Pillow block ball bearing units, grub screw locking, inch shafts

d **3/4 – 4** in.
19,05 – 101,6 mm

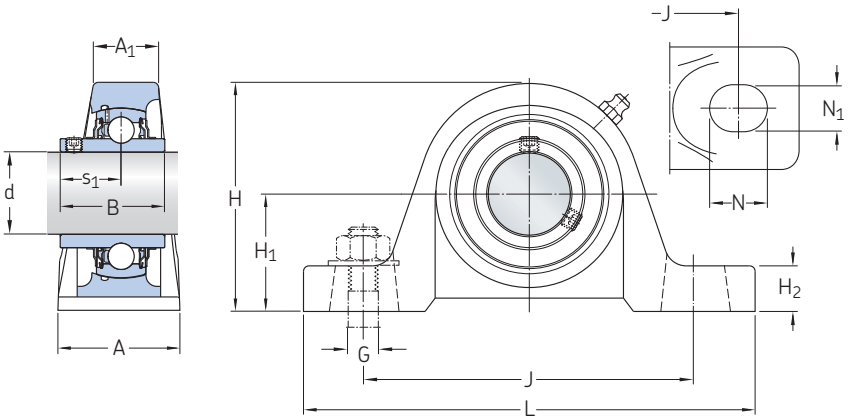

Principal dimensions			Basic load ratings dynamic	static	Fatigue load limit	Limiting speed with shaft tolerance h6	Mass	Designations
d	H_1	J	C	C_0	P_u			
in./*mm*	mm		kN			r/min	kg	–
3/4 *19,05*	33,3	95	12,7	6,7	0,285	6 500	0,6	**UCP 204-12**
7/8 *22,225*	36,5	105	14	7,8	0,335	5 850	0,79	**UCP 205-14**
15/16 *23,812*	36,5	105	14	7,8	0,335	5 850	0,77	**UCP 205-15**
1 *25,4*	36,5	105	14	7,8	0,335	5 850	0,76	**UCP 205-16**
1 1/8 *28,575*	42,9	121	19,5	11,4	0,48	5 000	1,2	**UCP 206-18**
1 3/16 *30,162*	42,9	121	19,5	11,4	0,48	5 000	1,2	**UCP 206-19**
1 1/4 *31,75*	47,6	127	25,5	15,3	0,655	4 300	1,55	**UCP 207-20**
1 3/8 *34,925*	47,6	127	25,5	15,3	0,655	4 300	1,5	**UCP 207-22**
1 7/16 *36,512*	47,6	127	25,5	15,3	0,655	4 300	1,5	**UCP 207-23**
1 1/2 *38,1*	49,2	137	32,5	20	0,85	3 750	2,05	**UCP 208-24**
1 3/4 *44,45*	54	146	32,5	20,4	0,865	3 400	2,25	**UCP 209-28**
2 *50,8*	63,5	171	43,6	29	1,25	3 000	3,75	**UCP 211-32**
2 1/4 *57,15*	69,8	184	52,7	36	1,53	2 700	4,8	**UCP 212-36**
2 1/2 *63,5*	76,2	203	57,2	40	1,7	2 350	6,35	**UCP 213-40**
3 *76,2*	100	290	114	76,5	3	2 300	15,4	**UCP 315-48**
4 *101,6*	140	380	174	140	4,75	1 700	36,4	**UCP 320-64**

Dimensions

d	A	A_1	B	H	H_2	L	N	N_1	G	s_1
in./*mm*	mm									
3/4 *19,05*	34	21	31	64,5	13,5	127	18	13	10	18,3
7/8 *22,225*	38	22	34	70,5	16	139,5	18	13	10	19,7
15/16 *23,812*	38	22	34	70,5	16	139,5	18	13	10	19,7
1 *25,4*	38	22	34	70,5	16	139,5	18	13	10	14,3
1 1/8 *28,575*	45	24	38,1	83,5	16,5	165	21	17	14	22,2
1 3/16 *30,162*	45	24	38,1	83,5	16,5	165	21	17	14	22,2
1 1/4 *31,75*	46	27	42,9	93,5	18,5	166,5	21	17	14	25,4
1 3/8 *34,925*	46	27	42,9	93,5	18,5	166,5	21	17	14	25,4
1 7/16 *36,512*	46	27	42,9	93,5	18,5	166,5	21	17	14	25,4
1 1/2 *38,1*	49	29	49,2	101	20,5	184	21	17	14	30,2
1 3/4 *44,45*	51	29	49,2	108	19	189,5	21	17	14	30,2
2 *50,8*	59	35	55,6	126	22	219	22	20	16	33,4
2 1/4 *57,15*	62	36	65,1	141,5	22	239,5	25	20	16	39,7
2 1/2 *63,5*	72	35	65,1	153,5	25,5	265	30	25	20	39,7
3 *76,2*	86	57,6	82	202,7	40	368	39,5	27	22	50
4 *101,6*	107	71,4	108	283,7	55	482	49,5	36	30	66

Square flanged ball bearing units, grub screw locking, metric shafts

d **20 – 100** mm

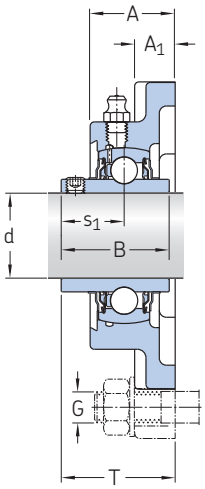

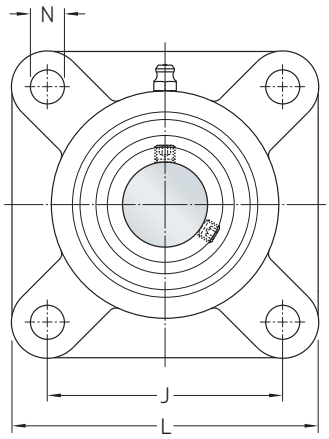

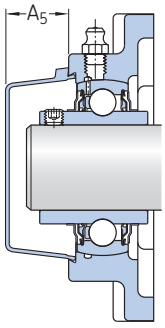

UCF 204/H to UCF 213/H

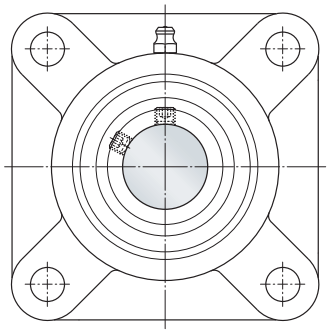

UCF 214 to UCF 218
UCF 306 to UCF 320

Principal dimensions		**Basic load ratings** dynamic	static	**Fatigue load limit**	**Limiting speed** with shaft tolerance h6	**Mass**	**Designations** Ball bearing unit	Associated end cover
d	J	C	C_0	P_u				
mm		kN			r/min	kg	–	
20	64	12,7	6,55	0,28	6 500	0,53	**UCF 204/H**	ECY 204
25	70	14	7,8	0,335	5 850	0,72	**UCF 205/H**	ECY 205
30	83	19,5	11,2	0,475	5 000	1,05	**UCF 206/H**	ECY 206
	95	26,5	15	0,64	5 300	1,75	**UCF 306**	–
35	92	25,5	15,3	0,655	4 300	1,35	**UCF 207/H**	ECY 207
	100	33,2	19,3	0,815	4 700	2,1	**UCF 307**	–
40	102	30,7	19	0,8	3 750	1,8	**UCF 208/H**	ECY 208
	112	41	24	1,02	4 200	2,65	**UCF 308**	–
45	105	33,2	21,6	0,915	3 400	2,1	**UCF 209/H**	ECY 209
	125	52,7	32	1,34	3 750	3,8	**UCF 309**	–
50	111	35,1	23,2	0,98	3 300	2,4	**UCF 210/H**	ECY 210
	132	61,8	38	1,6	3 400	4,95	**UCF 310**	–
55	130	43,6	29	1,25	3 000	3,4	**UCF 211/H**	ECY 211
	140	71,5	45	1,9	3 100	5,5	**UCF 311**	–
60	143	52,7	36	1,53	2 700	4,05	**UCF 212/H**	ECY 212
	150	81,9	52	2,2	2 900	7	**UCF 312**	–
65	149	57,2	40	1,7	2 350	5,35	**UCF 213/H**	ECY 213
70	152	62	44	1,86	2 250	5,95	**UCF 214**	ECY 214
75	159	66	49	2,04	2 100	6,2	**UCF 215**	ECY 215
	184	114	76,5	3	2 300	11,6	**UCF 315**	–
80	165	72	54	2,2	1 900	7,35	**UCF 216**	ECY 216
	196	124	86,5	3,25	2 150	15,4	**UCF 316**	–
85	175	83,2	64,0	2,5	1 800	8,91	**UCF 217**	ECY 217
90	187	96	72	2,7	1 600	11,5	**UCF 218**	ECY 218
100	242	174	140	4,75	1 700	29,8	**UCF 320**	–

Dimensions

d	A	A_1	A_5	B	L	N	G	s_1	T
mm									
20	25,5	11	20,5	31	86	12	10	18,3	33,3
25	27	13	20,5	34,1	95	12	10	19,8	35,8
30	30 34	14 16	22,5 –	38,1 43	108 127	12 16	10 14	22,2 26	40,2 44
35	32 38	15 17	24,5 –	42,9 48	118 137	14 19	12 16	25,4 29	44,4 49
40	35,5 42	15 18	26 –	49,2 52	130 149	16 19	14 16	30,2 33	51,2 56
45	38 46	16 19	26,5 –	49,2 57	137 162	16 19	14 16	30,2 35	52,2 60
50	39,5 49,5	16 20	33 –	51,6 61	143 175	16 23	14 20	32,6 39	54,6 67
55	43 53	18 21	37,5 –	55,6 66	162 175	19 23	16 20	33,4 41	58,4 71
60	47,5 57,5	18 23	39 –	65,1 71	175 193	19 23	16 20	39,7 45	68,7 78
65	50	22	39	68,3	187	19	16	42,9	72,9
70	54	22	41,5	74,6	193	19	16	44,4	75,4
75	56,5 68	22 26	41,5 –	77,8 82	200 229	19 25	16 22	44,5 50	78,3 89
80	58 68,5	22 28	41,5 –	82,6 86	208 252	23 31	20 28	49,3 52	83,3 90
85	62,7	23,8	43,2	85,7	219,9	23	20	51,6	87,6
90	68,5	25	45,5	96	235	23	20	56,3	96
100	94,5	33	–	108	312	38	33	66	125

Square flanged ball bearing units, grub screw locking, inch shafts

d **3/4 – 4** in.

19,05 – 101,6 mm

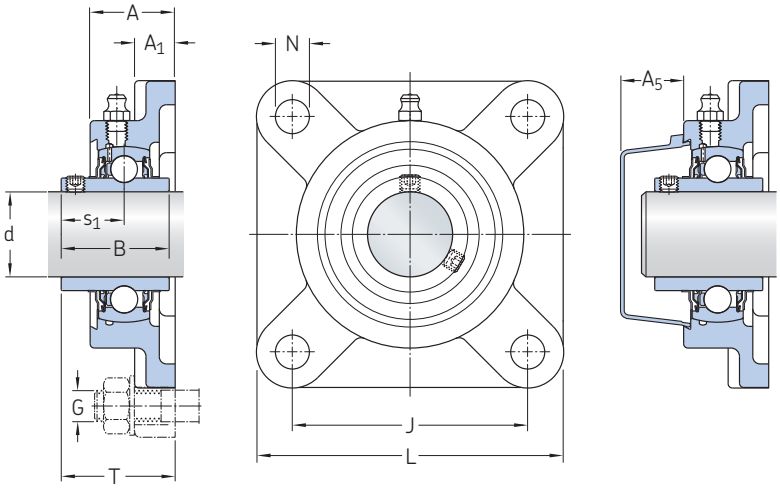

Principal dimensions		Basic load ratings dynamic	static	Fatigue load limit	Limiting speed with shaft tolerance h6	Mass	Designations Ball bearing unit	Associated end cover
d	J	C	C_0	P_u				
in./*mm*	mm	kN			r/min	kg	–	
3/4 *19,05*	64	12,7	6,7	0,285	6 500	0,53	**UCF 204-12**	ECY 204
7/8 *22,225*	70	14	7,8	0,335	5 850	0,74	**UCF 205-14**	ECY 205
15/16 *23,812*	70	14	7,8	0,335	5 850	0,73	**UCF 205-15**	ECY 205
1 *25,4*	70	14	7,8	0,335	5 850	0,71	**UCF 205-16**	ECY 205
1 1/8 *28,575*	83	19,5	11,4	0,48	5 000	1,05	**UCF 206-18**	ECY 206
1 3/16 *30,162*	83	19,5	11,4	0,48	5 000	1,05	**UCF 206-19**	ECY 206
1 1/4 *31,75*	92	25,5	15,3	0,655	4 300	1,4	**UCF 207-20**	ECY 207
1 3/8 *34,925*	92	25,5	15,3	0,655	4 300	1,35	**UCF 207-22**	ECY 207
1 7/16 *36,512*	92	25,5	15,3	0,655	4 300	1,3	**UCF 207-23**	ECY 207
1 1/2 *38,1*	102	32,5	20	0,85	3 750	1,85	**UCF 208-24**	ECY 208
1 3/4 *44,45*	105	32,5	20,4	0,865	3 400	2,1	**UCF 209-28**	ECY 209
2 *50,8*	130	43,6	29	1,25	3 000	3,6	**UCF 211-32**	ECY 211
2 1/4 *57,15*	143	52,7	36	1,53	2 700	4,25	**UCF 212-36**	ECY 212
2 1/2 *63,5*	149	57,2	40	1,7	2 350	5,4	**UCF 213-40**	ECY 213
3 *76,2*	184	114	76,5	3	2 300	11,6	**UCF 315-48**	-
4 *101,6*	242	174	140	4,75	1 700	29,5	**UCF 320-64**	-

Dimensions

d	A	A_1	A_5	B	L	N	G	s_1	T
in./*mm*	mm								
3/4 *19,05*	25,5	11	20,5	31	86	12	10	18,3	33,3
7/8 *22,225*	27	13	20,5	34	95	12	10	19,7	35,7
15/16 *23,812*	27	13	20,5	34	95	12	10	19,7	35,7
1 *25,4*	27	13	20,5	34	95	12	10	14,3	35,7
1 1/8 *28,575*	30	14	22,5	38,1	108	12	10	22,2	40,2
1 3/16 *30,162*	30	14	22,5	38,1	108	12	10	22,2	40,2
1 1/4 *31,75*	32	15	24,5	42,9	118	14	12	25,4	44,4
1 3/8 *34,925*	32	15	24,5	42,9	118	14	12	25,4	44,4
1 7/16 *36,512*	32	15	24,5	42,9	118	14	12	25,4	44,4
1 1/2 *38,1*	35,5	15	26	49,2	130	16	14	30,2	51,2
1 3/4 *44,45*	38	16	26,5	49,2	137	16	14	30,2	52,2
2 *50,8*	43	18	37,5	55,6	162	19	16	33,4	58,4
2 1/4 *57,15*	47,5	18	39	65,1	175	19	16	39,7	68,7
2 1/2 *63,5*	50	22	39	65,1	187	19	16	39,7	69,7
3 *76,2*	68	26	–	82	229	25	22	50	89
4 *101,6*	94,5	33	–	108	312	38	33	66	125

Oval flanged ball bearing units, grub screw locking

d **20 – 90** mm

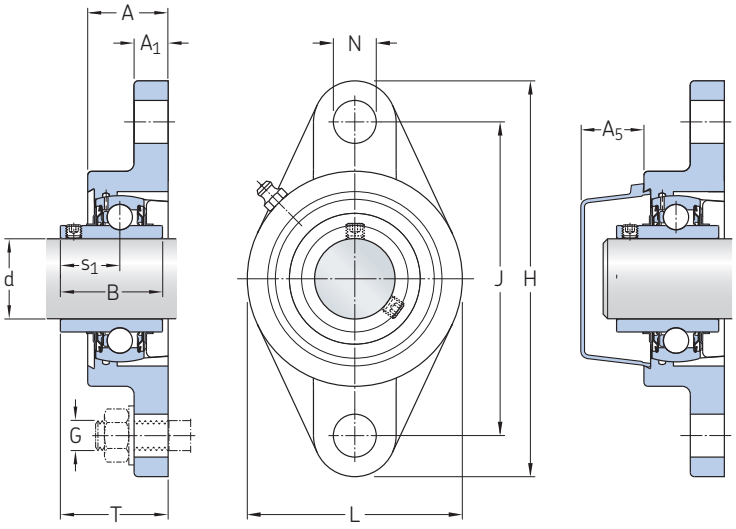

UCFL 204/H to UCFL 213/H

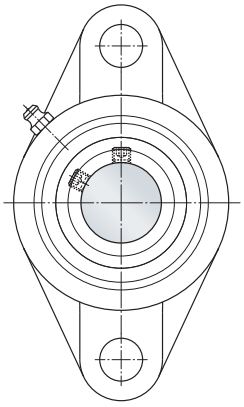

UCFL 214 to UCFL 218

Principal dimensions		**Basic load ratings** dynamic	static	**Fatigue load limit**	**Limiting speed** with shaft tolerance h6	**Mass**	**Designations** Ball bearing unit	Associated end cover
d	J	C	C_0	P_u				
mm		kN			r/min	kg	–	
20	90	12,7	6,55	0,28	6 500	0,44	**UCFL 204/H**	ECY 204
25	99	14	7,8	0,335	5 850	0,61	**UCFL 205/H**	ECY 205
30	117	19,5	11,2	0,475	5 000	0,9	**UCFL 206/H**	ECY 206
35	130	25,5	15,3	0,655	4 300	1,15	**UCFL 207/H**	ECY 207
40	144	30,7	19	0,8	3 750	1,5	**UCFL 208/H**	ECY 208
45	148	33,2	21,6	0,915	3 400	1,8	**UCFL 209/H**	ECY 209
50	157	35,1	23,2	0,98	3 300	2,2	**UCFL 210/H**	ECY 210
55	184	43,6	29	1,25	3 000	3,05	**UCFL 211/H**	ECY 211
60	202	52,7	36	1,53	2 700	3,85	**UCFL 212/H**	ECY 212
65	210	57,2	40	1,7	2 350	4,85	**UCFL 213/H**	ECY 213
70	216	62,4	44	1,86	2 250	5,45	**UCFL 214**	ECY 214
75	225	66,3	49	2,04	2 100	5,95	**UCFL 215**	ECY 215
80	233	71,5	54	2,2	1 900	7,5	**UCFL 216**	ECY 216
85	248	83,2	64,0	2,5	1 800	8,83	**UCFL 217**	ECY 217
90	265	95,6	72	2,7	1 600	11,3	**UCFL 218**	ECY 218

Dimensions

d	A	A_1	A_5	B	H	L	N	G	s_1	T
mm										
20	25,5	11	20,5	31	113	60	12	10	18,3	33,3
25	27	13	20,5	34,1	130	68	16	14	19,8	35,8
30	30	13	22,5	38,1	147,5	80	16	14	22,2	40,2
35	32	14	24,5	42,9	161	90	16	14	25,4	44,4
40	34	14	26	49,2	174,5	100	16	14	30,2	51,2
45	35	15	26,5	49,2	188	108	19	16	30,2	51,2
50	39	15	33	51,6	197	115	19	16	32,6	53,6
55	41,5	18	37,5	55,6	224	130	19	16	33,4	58,4
60	45	18	39	65,1	250	140	23	20	39,7	68,7
65	47	20	39	68,3	258	155	23	20	42,9	72,9
70	50	20	41,5	74,6	265	160	23	20	44,4	75,4
75	54	20	41,5	77,8	275	164	23	20	44,5	78,5
80	56	20	41,5	82,6	290	180	25	22	49,3	83,3
85	60	22	43,2	85,7	305	190	25	22	51,6	87,6
90	68	23	45,5	96	320	205	25	22	56,3	96,3

Round flanged ball bearing units, grub screw locking

d **20 – 90** mm

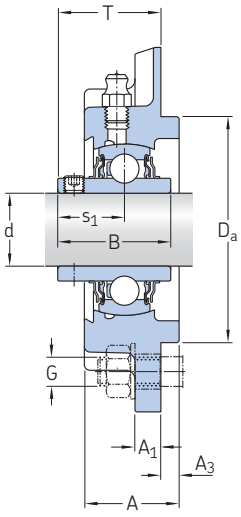

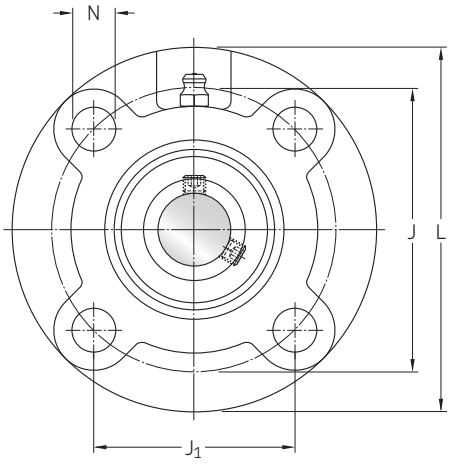

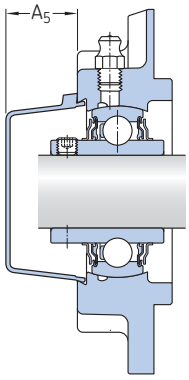

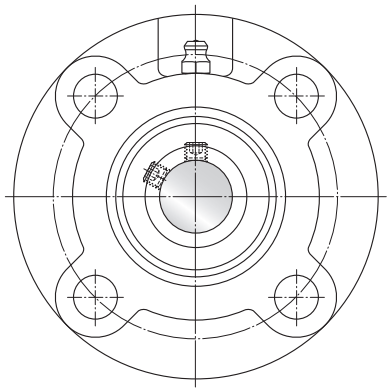

UCFC 204/H to UCFC 213/H

UCFC 214 to UCFC 218

Principal dimensions				Basic load ratings dynamic	static	Fatigue load limit	Limiting speed with shaft tolerance h6	Mass	Designations Ball bearing unit	Associated end cover
d	D_a h8	J	J_1	C	C_0	P_u				
mm				kN			r/min	kg	–	
20	62	78	55,2	12,7	6,55	0,28	6 500	0,71	**UCFC 204/H**	ECY 204
25	70	90	63,6	14	7,8	0,335	5 850	1	**UCFC 205/H**	ECY 205
30	80	100	70,7	19,5	11,2	0,475	5 000	1,3	**UCFC 206/H**	ECY 206
35	90	110	77,8	25,5	15,3	0,655	4 300	1,6	**UCFC 207/H**	ECY 207
40	100	120	84,9	30,7	19	0,8	3 750	2	**UCFC 208/H**	ECY 208
45	105	132	93,3	33,2	21,6	0,915	3 400	2,7	**UCFC 209/H**	ECY 209
50	110	138	97,6	35,1	23,2	0,98	3 300	2,9	**UCFC 210/H**	ECY 210
55	125	150	106,1	43,6	29	1,25	3 000	4,1	**UCFC 211/H**	ECY 211
60	135	160	113,1	52,7	36	1,53	2 700	4,95	**UCFC 212/H**	ECY 212
65	145	170	120,2	57,2	40	1,7	2 350	5,65	**UCFC 213/H**	ECY 213
70	150	177	125,2	62,4	44	1,86	2 250	6,85	**UCFC 214**	ECY 214
75	160	184	130,1	66,3	49	2,04	2 100	7,35	**UCFC 215**	ECY 215
80	170	200	141,4	71,5	54	2,2	1 900	9,1	**UCFC 216**	ECY 216
85	180	208	147,1	83,2	64,0	2,5	1 800	10,3	**UCFC 217**	ECY 217
90	190	220	155,6	95,6	72	2,7	1 600	12,8	**UCFC 218**	ECY 218

Dimensions

d	A	A_1	A_3	A_5	B	L	N	G	s_1	T
mm										
20	26	7	5	20,5	31	100	12	10	18,3	28,3
25	27,5	7	6	20,5	34,1	115	12	10	19,8	29,8
30	30	8	8	22,5	38,1	125	12	10	22,2	32,2
35	32	9	8	24,5	42,9	135	14	12	25,4	36,4
40	35,5	9	10	26	49,2	145	14	12	30,2	41,2
45	37,5	14	12	26,5	49,2	160	16	14	30,2	40,2
50	39	14	12	33	51,6	165	16	14	32,6	42,6
55	43	15	12	37,5	55,6	185	19	16	33,4	46,4
60	47,5	15	12	39	65,1	195	19	16	39,7	56,7
65	50	15	14	39	68,3	205	19	16	42,9	58,9
70	54	10	14	41,5	74,6	215	19	16	44,4	61,4
75	56	10	16	41,5	77,8	220	19	16	44,5	62,5
80	58	10	16	41,5	82,6	240	23	20	49,3	67,3
85	62,7	18	18	43,2	85,7	250	23	20	51,6	69,6
90	68,5	20	18	45,5	96	265	23	20	56,3	78,3

Take-up ball bearing units, grub screw locking

d **20 – 85** mm

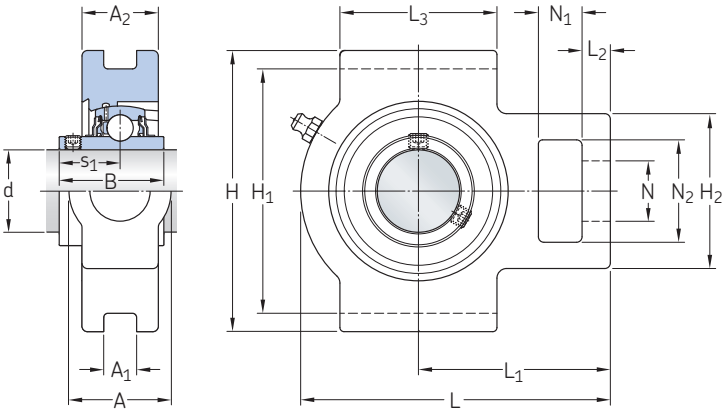

UCT 204/H to UCT 213/H

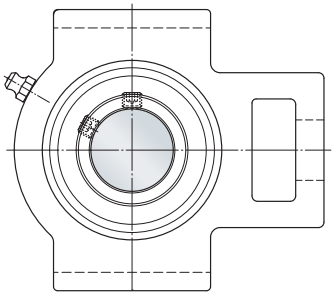

UCT 214 to UCT 217

Principal dimensions				Basic load ratings dynamic	static	Fatigue load limit	Limiting speed with shaft tolerance h6	Mass	Designations Ball bearing unit	Associated end cover
d	H_1	A_1	N	C	C_0	P_u				
mm				kN			r/min	kg	–	
20	76	12	19	12,7	6,55	0,28	6 500	0,7	**UCT 204/H**	ECY 204
25	76	12	19	14	7,8	0,335	5 850	0,79	**UCT 205/H**	ECY 205
30	89	12	22	19,5	11,2	0,475	5 000	1,25	**UCT 206/H**	ECY 206
35	89	12	22	25,5	15,3	0,655	4 300	1,6	**UCT 207/H**	ECY 207
40	102	16	29	30,7	19	0,8	3 750	2,35	**UCT 208/H**	ECY 208
45	102	16	29	33,2	21,6	0,915	3 400	2,35	**UCT 209/H**	ECY 209
50	102	16	29	35,1	23,2	0,98	3 300	2,5	**UCT 210/H**	ECY 210
55	130	22	35	43,6	29	1,25	3 000	3,85	**UCT 211/H**	ECY 211
60	130	22	35	52,7	36	1,53	2 700	4,7	**UCT 212/H**	ECY 212
65	151	26	41	57,2	40	1,7	2 350	6,7	**UCT 213/H**	ECY 213
70	151	26	41	62,4	44	1,86	2 250	6,9	**UCT 214**	ECY 214
75	151	26	41	66,3	49	2,04	2 100	7,2	**UCT 215**	ECY 215
80	165	26	41	71,5	54	2,2	1 900	8,3	**UCT 216**	ECY 216
85	173	30	48	83,2	64	2,5	1 800	10,8	**UCT 217**	ECY 217

Dimensions

d	A	A_2	A_5	B	H	H_2	L	L_1	L_2	L_3	N_1	N_2	s_1
mm													
20	32	21	20,5	31	89	51	94	61	10	51	16	32	18,3
25	32	24	20,5	34,1	89	51	97	62	10	51	16	32	19,8
30	37	28	22,5	38,1	102	56	113	70	10	57	16	37,5	22,2
35	37	30	24,5	42,9	102	64	129	78	13	64	16	37,5	25,4
40	49	33	26	49,2	114	83	145	88	16	83	19	49	30,2
45	49	35	26,5	49,2	117	83	145	87	16	83	21	51	30,2
50	49	37	33	51,6	117	83	148	90	16	86	19	49	32,6
55	64	38	37,5	55,6	146	102	172	106	19	95	25	64,5	33,4
60	64	42	39	65,1	146	102	45	119	19	102	32	64,5	39,7
65	70	44	39	68,3	167	111	225	137	21	121	32	70	42,9
70	70	46	41,5	74,6	167	111	225	137	21	121	32	70	44,4
75	70	48	41,5	77,8	167	111	232	140	21	121	32	70	44,5
80	70	51	41,5	82,6	184	111	235	140	21	121	32	70	49,3
85	73	54	43	85,7	198	124	260	162	29	157	38	73	51,6

3-bolt bracket flanged ball bearing units, grub screw locking

d **20 – 45** mm

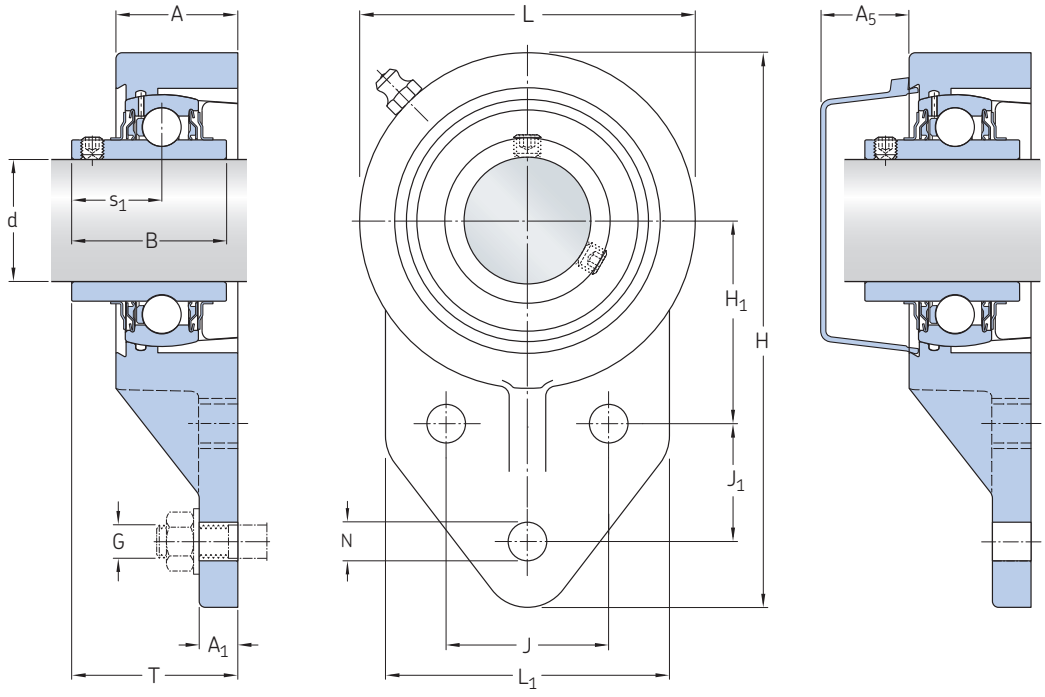

Principal dimensions				Basic load ratings dynamic	static	Fatigue load limit	Limiting speed with shaft tolerance h6	Mass	Designations Ball bearing unit	Associated end cover
d	H_1	J	J_1	C	C_0	P_u				
mm				kN			r/min	kg	–	
20	42	32	27	12,7	6,7	0,285	6 700	0,59	**UCFB 204/H**	ECY 204
25	45	34	27	14	7,8	0,335	7 000	0,72	**UCFB 205/H**	ECY 205
30	50	40	29	19,5	11,2	0,475	5 000	1,05	**UCFB 206/H**	ECY 206
35	55	46	32	25,5	15,3	0,655	4 300	1,4	**UCFB 207/H**	ECY 207
40	60	50	41	30,7	19	0,8	3 750	1,8	**UCFB 208/H**	ECY 208
45	65	54	43	33,2	21,6	0,915	3 400	2,15	**UCFB 209/H**	ECY 209

Dimensions

d	A	A_1	A_5	B	H	L	L_1	N	G	s_1	T
mm											
20	25,5	8	20,5	31	112	64	64	9,5	8	18,3	31,8
25	27	10	20,5	34,1	118	70	66	9,5	8	19,8	34,7
30	30	10	22,5	38,1	137	83	70	9,5	8	22,2	40,9
35	33,5	13	24,5	42,9	144	90	83	9,5	8	25,4	44,4
40	35,5	16	26	49,2	164	100	78	11	10	30,2	51,2
45	37	18	26,5	49,2	176	106	80	11	10	30,2	50,2

Short base pillow block ball bearing units, grub screw locking

d **20 – 50** mm

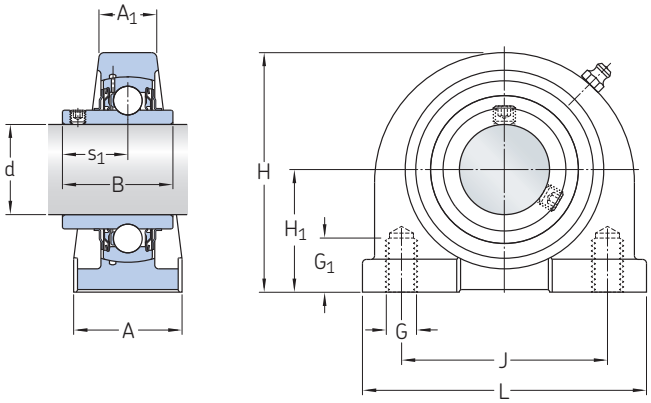

Principal dimensions			Basic load ratings dynamic	static	Fatigue load limit	Limiting speed with shaft tolerance h6	Mass	Designations
d	H_1	J	C	C_0	P_u			
mm			kN			r/min	kg	–
20	30,2	52	12,7	6,55	0,28	8 500	0,54	**UCPA 204/H**
25	36,5	56	14	7,8	0,335	7 000	0,76	**UCPA 205/H**
30	42,8	66	19,5	11,2	0,475	6 300	0,99	**UCPA 206/H**
35	47,6	80	25,5	15,3	0,655	4 300	1,45	**UCPA 207/H**
40	49,2	84	30,7	19	0,8	3 750	1,65	**UCPA 208/H**
45	54,2	90	33,2	21,6	0,915	3 400	1,85	**UCPA 209/H**
50	57,2	94	35,1	23,2	0,98	3 300	2,25	**UCPA 210/H**

Dimensions

d	A	A_1	B	H	L	G	G_1	s_1
mm						–	mm	
20	34	18	31	62	76	M10	13	18,3
25	40	21	34,1	73	84	M10	13	19,8
30	39	19	38,1	84	93,5	M12	18	22,2
35	42	22	42,9	93	110,5	M14	20	25,4
40	45	27	49,2	98	116	M14	20	30,2
45	45	26	49,2	106	120	M14	25	30,2
50	51	27	51,6	113	130	M16	25	32,6

Pillow block ball bearing units, adapter locking

d **20 – 60** mm

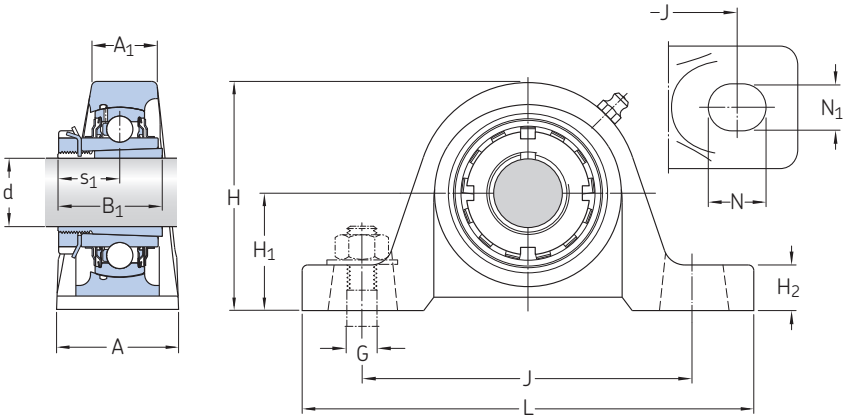

Principal dimensions			Basic load ratings dynamic	static	Fatigue load limit	Limiting speed with shaft tolerance h6	Mass	Designations Ball bearing unit	Adapter sleeve[1]
d	H_1	J	C	C_0	P_u				
mm			kN			r/min	kg	–	
20	36,5	105	14	7,8	0,335	5 850	0,82	**UKP 205 K/H**	H 2305
25	42,9	121	19,5	11,2	0,475	5 000	1,25	**UKP 206 K/H**	H 2306
30	47,6	127	25,5	15,3	0,655	4 300	1,6	**UKP 207 K/H**	H 2307
35	49,2	137	30,7	19	0,8	3 750	2,1	**UKP 208 K/H**	H 2308
40	54	146	33,2	21,6	0,915	3 400	2,4	**UKP 209 K/H**	H 2309
45	57,2	159	35,1	23,2	0,98	3 300	2,9	**UKP 210 K/H**	H 2310
50	63,5	171	43,6	29	1,25	3 000	3,75	**UKP 211 K/H**	H 2311
55	69,8	184	52,7	36	1,53	2 700	4,7	**UKP 212 K/H**	H 2312
60	76,2	203	57,2	40	1,7	2 350	6,4	**UKP 213 K/H**	H 2313

[1] Order adapter sleeve separately.

Dimensions

d	A	A_1	B_1	H	H_2	L	N	N_1	G	s_1[2)]
mm										
20	38	22	35	70,5	16	139,5	18	13	10	20,5
25	45	24	38	83,5	16,5	165	21	17	14	22,5
30	46	27	43	93,5	18,5	166,5	21	17	14	24,8
35	49	29	46	101	20,5	184	21	17	14	27,5
40	51	29	50	108	19	189,5	21	17	14	29
45	56	31	55	116	19	206,5	22	20	16	31,1
50	59	35	59	126	22	219	22	20	16	32,5
55	62	36	62	141,5	22	239,5	25	20	16	33,8
60	72	35	65	153,5	25,5	265	30	25	20	35,3

2) Values for s_1 are valid before the sleeve is driven into the bearing bore (sleeve and inner ring at starting position).

Square flanged ball bearing units, adapter locking

d **20 – 60** mm

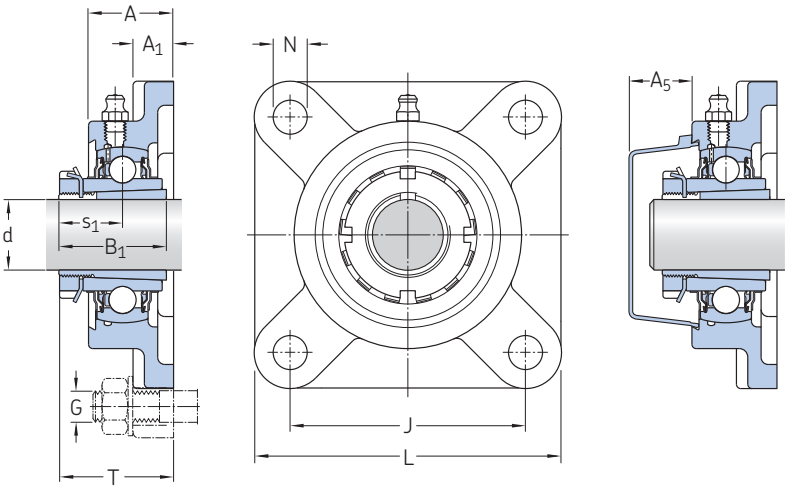

Principal dimensions		Basic load ratings dynamic	static	Fatigue load limit	Limiting speed with shaft tolerance h6	Mass	Designations Ball bearing unit	Adapter sleeve[1)]	Associated end cover
d	J	C	C_0	P_u					
mm		kN			r/min	kg	–		
20	70	14	7,8	0,335	5 850	0,77	**UKF 205 K/H**	H 2305	ECY 205
25	83	19,5	11,2	0,475	5 000	1,15	**UKF 206 K/H**	H 2306	ECY 206
30	92	25,5	15,3	0,655	4 300	1,45	**UKF 207 K/H**	H 2307	ECY 207
35	102	30,7	19	0,8	3 750	1,9	**UKF 208 K/H**	H 2308	ECY 208
40	105	33,2	21,6	0,915	3 400	2,25	**UKF 209 K/H**	H 2309	ECY 209
45	111	35,1	23,2	0,98	3 300	2,6	**UKF 210 K/H**	H 2310	ECY 210
50	130	43,6	29	1,25	3 000	3,6	**UKF 211 K/H**	H 2311	ECY 211
55	143	52,7	36	1,53	2 700	4,2	**UKF 212 K/H**	H 2312	ECY 212
60	149	57,2	40	1,7	2 350	5,45	**UKF 213 K/H**	H 2313	ECY 213

[1)] Order adapter sleeve separately.

Dimensions

d	A	A_1	A_5	B_1	L	N	G	s_1[2)]	T
mm									
20	27	13	20,5	35	95	12	10	20,5	36,5
25	30	14	22,5	38	108	12	10	22,5	40,5
30	32	15	24,5	43	118	14	12	24,8	43,8
35	35,5	15	26	46	130	16	14	27,5	48,5
40	38	16	26,5	50	137	16	14	29	51
45	39,5	16	33	55	143	16	14	31,1	53,1
50	43	18	37,5	59	162	19	16	32,5	57,5
55	47,5	18	39	62	175	19	16	33,8	62,8
60	50	22	39	65	187	19	16	35,3	65,3

[2)] Values for s_1 are valid before the sleeve is driven into the bearing bore (sleeve and inner ring at starting position).

Oval flanged ball bearing units, adapter locking

d **20 – 60** mm

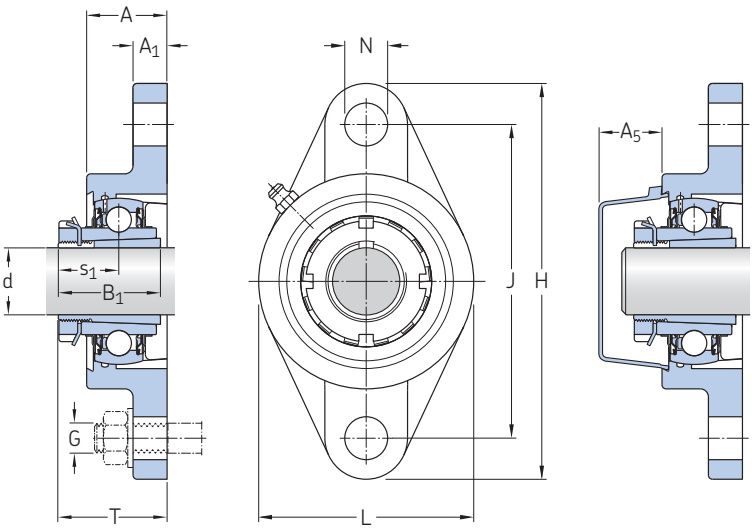

Principal dimensions		Basic load ratings dynamic	static	Fatigue load limit	Limiting speed with shaft tolerance h6	Mass	Designations Ball bearing unit	Adapter sleeve[1]	Associated end cover
d	J	C	C_0	P_u					
mm		kN			r/min	kg	–		
20	99	14	7,8	0,335	5 850	0,67	**UKFL 205 K/H**	H 2305	ECY 205
25	117	19,5	11,2	0,475	5 000	0,97	**UKFL 206 K/H**	H 2306	ECY 206
30	130	25,5	15,3	0,655	4 300	1,25	**UKFL 207 K/H**	H 2307	ECY 207
35	144	30,7	19	0,8	3 750	1,6	**UKFL 208 K/H**	H 2308	ECY 208
40	148	33,2	21,6	0,915	3 400	2	**UKFL 209 K/H**	H 2309	ECY 209
45	157	35,1	23,2	0,98	3 300	2,4	**UKFL 210 K/H**	H 2310	ECY 210
50	184	43,6	29	1,25	3 000	3,3	**UKFL 211 K/H**	H 2311	ECY 211
55	202	52,7	36	1,53	2 700	4	**UKFL 212 K/H**	H 2312	ECY 212
60	210	57,2	40	1,7	2 350	5	**UKFL 213 K/H**	H 2313	ECY 213

[1] Order adapter sleeve separately.

Dimensions

d	A	A_1	A_5	B_1	H	L	N	G	s_1[2)]	T
mm										
20	27	13	20,5	35	130	68	16	14	20,5	36,5
25	30	13	22,5	38	147,5	80	16	14	22,5	40,5
30	32	14	24,5	43	161	90	16	14	24,8	43,8
35	34	14	26	46	174,5	100	16	14	27,5	48,5
40	35	15	26,5	50	188	108	19	16	29	51
45	39	15	33	55	197	115	19	16	31,1	53,1
50	41,5	18	37,5	59	224	130	19	16	32,5	57,5
55	45	18	39	62	250	140	23	20	33,8	62,8
60	47	20	39	65	258	155	23	20	35,3	65,3

2) Values for s_1 are valid before the sleeve is driven into the bearing bore (sleeve and inner ring at starting position).

Round flanged ball bearing units, adapter locking

d **20 – 60** mm

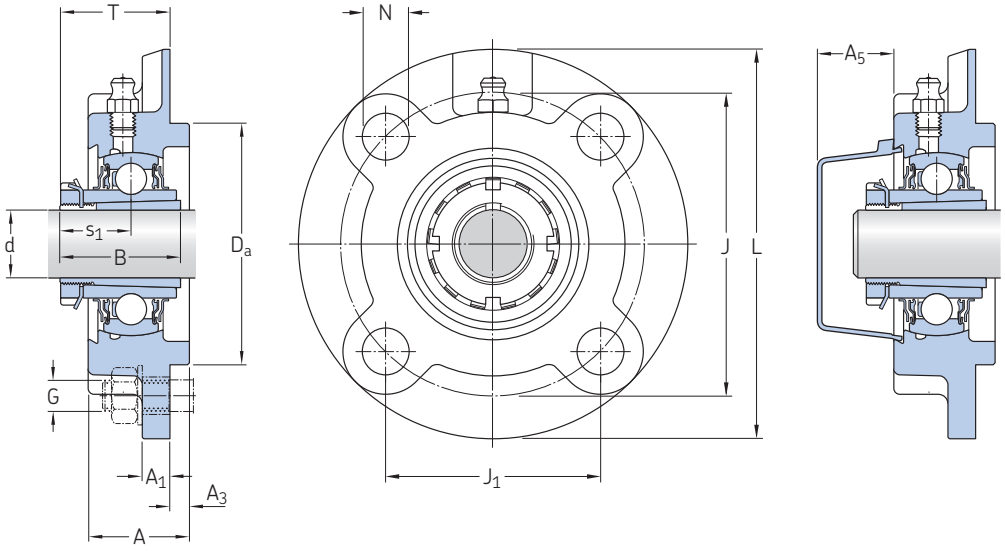

Principal dimensions				Basic load ratings dynamic	static	Fatigue load limit	Limiting speed with shaft tolerance h6	Mass	Designations Ball bearing unit	Adapter sleeve[1)]	Associated end cover
d	D_a h8	J	J_1	C	C_0	P_u					
mm				kN			r/min	kg	–		
20	70	90	63,6	14	7,8	0,335	5 850	1,05	**UKFC 205 K/H**	H 2305	ECY 205
25	80	100	70,7	19,5	11,2	0,475	5 000	1,35	**UKFC 206 K/H**	H 2306	ECY 206
30	90	110	77,8	25,5	15,3	0,655	4 300	1,7	**UKFC 207 K/H**	H 2307	ECY 207
35	100	120	84,9	30,7	19	0,8	3 750	2,15	**UKFC 208 K/H**	H 2308	ECY 208
40	105	132	93,3	33,2	21,6	0,915	3 400	2,9	**UKFC 209 K/H**	H 2309	ECY 209
45	110	138	97,6	35,1	23,2	0,98	3 300	3,1	**UKFC 210 K/H**	H 2310	ECY 210
50	125	150	106,1	43,6	29	1,25	3 000	4,3	**UKFC 211 K/H**	H 2311	ECY 211
55	135	160	113,1	52,7	36	1,53	2 700	5,1	**UKFC 212 K/H**	H 2312	ECY 212
60	145	170	120,2	57,2	40	1,7	2 350	5,75	**UKFC 213 K/H**	H 2313	ECY 213

[1)] Order adapter sleeve separately.

Dimensions

d	A	A_1	A_3	A_5	B_1	L	N	G	s_1[2)]	T
mm										
20	27,5	7	6	20,5	35	115	12	10	20,5	30,5
25	30	8	8	22,5	38	125	12	10	22,5	32,5
30	32	9	8	24,5	43	135	14	12	24,8	35,8
35	35,5	9	10	26	46	145	14	12	27,5	38,5
40	37,5	14	12	26,5	50	160	16	14	29	39
45	39	14	12	33	55	165	16	14	31,1	41,1
50	43	15	12	37,5	59	185	19	16	32,5	45,5
55	47,5	15	12	39	62	195	19	16	33,8	50,8
60	50	15	14	39	65	205	19	16	35,3	51,3

2) Values for s_1 are valid before the sleeve is driven into the bearing bore (sleeve and inner ring at starting position).

Take-up ball bearing units, adapter locking

d **20 – 60** mm

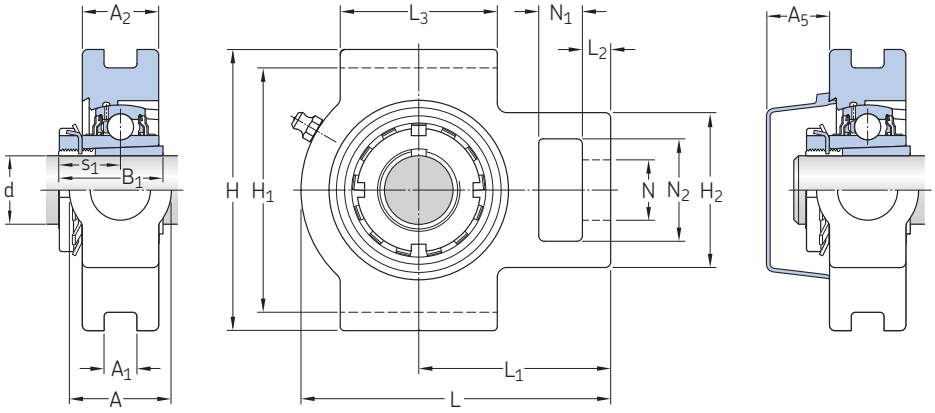

Principal dimensions				Basic load ratings dynamic	static	Fatigue load limit	Limiting speed with shaft tolerance h6	Mass	Designations Ball bearing unit	Adapter sleeve[1]	Associated end cover
d	H_1	A_1	N	C	C_0	P_u					
mm				kN			r/min	kg	–		
20	76	12	19	14	7,8	0,335	5 850	0,84	**UKT 205 K/H**	H 2305	ECY 205
25	89	12	22	19,5	11,2	0,475	5 000	1,3	**UKT 206 K/H**	H 2306	ECY 206
30	89	12	22	25,5	15,3	0,655	4 300	1,7	**UKT 207 K/H**	H 2307	ECY 207
35	102	16	29	30,7	19	0,8	3 750	2,45	**UKT 208 K/H**	H 2308	ECY 208
40	102	16	29	33,2	21,6	0,915	3 400	2,5	**UKT 209 K/H**	H 2309	ECY 209
45	102	16	29	35,1	23,2	0,98	3 300	2,7	**UKT 210 K/H**	H 2310	ECY 210
50	130	22	35	43,6	29	1,25	3 000	4,05	**UKT 211 K/H**	H 2311	ECY 211
55	130	22	35	52,7	36	1,53	2 700	4,8	**UKT 212 K/H**	H 2312	ECY 212
60	151	26	41	57,2	40	1,7	2 350	6,8	**UKT 213 K/H**	H 2313	ECY 213

[1] Order adapter sleeve separately.

Dimensions

d	A	A_2	A_5	B_1	H	H_2	L	L_1	L_2	L_3	N_1	N_2	s_1[2)]
mm													
20	32	24	20,5	35	89	51	97	62	10	51	16	32	20,5
25	37	28	22,5	38	102	56	113	70	10	57	16	37,5	22,5
30	37	30	24,5	43	102	64	129	78	13	64	16	37,5	24,8
35	49	33	26	46	114	83	145	88	16	83	19	49	27,5
40	49	35	26,5	50	117	83	145	87	16	83	21	51	29
45	49	37	33	55	117	83	148	90	16	86	19	49	31,1
50	64	38	37,5	59	146	102	172	106	19	95	25	64,5	32,5
55	64	42	39	62	146	102	194	119	19	102	32	64,5	33,8
60	70	44	39	65	167	111	225	137	21	121	32	70	35,3

2) Values for s_1 are valid before the sleeve is driven into the bearing bore (sleeve and inner ring at starting position).

3-bolt bracket flanged ball bearing units, adapter locking

d **20 – 40** mm

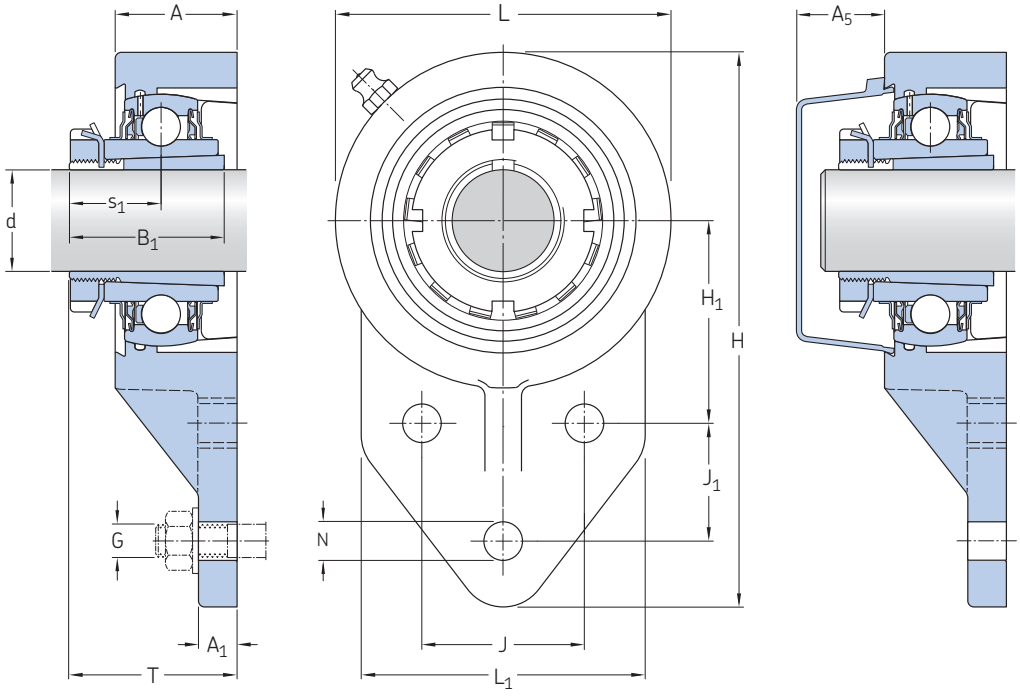

Principal dimensions				Basic load ratings dynamic	static	Fatigue load limit	Limiting speed with shaft tolerance h6	Mass	Designations Ball bearing unit	Adapter sleeve[1]	Associated end cover
d	H_1	J	J_1	C	C_0	P_u					
mm				kN			r/min	kg	–		
20	45	34	27	14	7,8	0,335	5 850	0,69	**UKFB 205K/H**	H 2305	ECY 205
25	50	40	29	19,5	11,2	0,475	5 000	1,1	**UKFB 206 K/H**	H 2306	ECY 206
30	55	46	32	25,5	15,3	0,655	4 300	1,5	**UKFB 207 K/H**	H 2307	ECY 207
35	60	50	41	30,7	19	0,8	3 750	1,95	**UKFB 208 K/H**	H 2308	ECY 208
40	65	54	43	33,2	21,6	0,915	3 400	2,3	**UKFB 209 K/H**	H 2309	ECY 209

[1] Order adapter sleeve separately.

Dimensions

d	A	A_1	A_5	B_1	H	L	L_1	N	G	s_1[2)]	T
mm											
20	27	10	20,5	35	118	70	66	9,5	8	12	34,7
25	30	10	22,5	38	137	83	70	9,5	8	22,5	41,2
30	33,5	13	24,5	43	144	90	83	9,5	8	24,8	43,8
35	35,5	16	26	46	164	100	78	11	10	27,5	48,5
40	37	18	26,5	50	176	106	80	11	10	29	49

2) Values for s_1 are valid before the sleeve is driven into the bearing bore (sleeve and inner ring at starting position).

Short base pillow block ball bearing units, adapter locking

d **20 – 45** mm

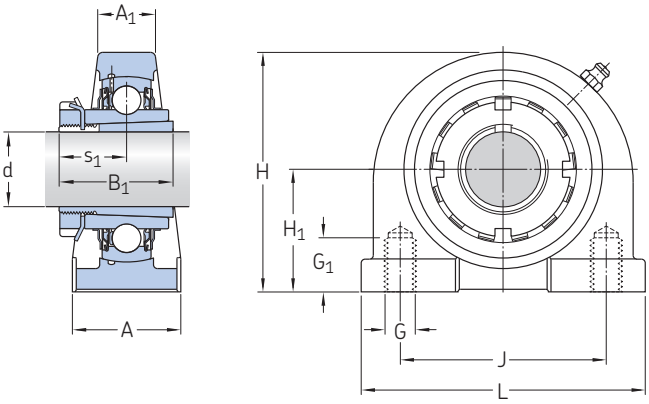

Principal dimensions			Basic load ratings dynamic	static	Fatigue load limit	Limiting speed with shaft tolerance h6	Mass	Designations Ball bearing unit	Adapter sleeve[1]
d	H_1	J	C	C_0	P_u				
mm			kN			r/min	kg	–	
20	36,5	56	14	7,8	0,335	5 850	0,82	**UKPA 205K/H**	H 2305
25	42,8	66	19,5	11,2	0,475	5 000	1,05	**UKPA 206K/H**	H 2306
30	47,6	80	25,5	15,3	0,655	4 300	1,5	**UKPA 207 K/H**	H 2307
35	49,2	84	30,7	19	0,8	3 750	1,75	**UKPA 208 K/H**	H 2308
40	54,2	90	33,2	21,6	0,915	3 400	2	**UKPA 209 K/H**	H 2309
45	57,2	94	35,1	23,2	0,98	3 300	2,45	**UKPA 210 K/H**	H 2310

[1] Order adapter sleeve separately.

Dimensions

d	A	A_1	B_1	H	L	G	G_1	s_1[2)]
mm						–	mm	
20	40	21	35	73	84	M10	13	12
25	39	19	38	84	93,5	M12	18	14
30	42	22	43	93	110,5	M14	20	24,8
35	45	27	46	98	116	M14	20	27,5
40	45	26	50	106	120	M14	25	29
45	51	27	55	113	130	M16	25	31,1

2) Values for s_1 are valid before the sleeve is driven into the bearing bore (sleeve and inner ring at starting position).

skf.com

® SKF is a registered trademark of the SKF Group.

© SKF Group 2019
The contents of this publication are the copyright of the publisher and may not be reproduced (even extracts) unless prior written permission is granted. Every care has been taken to ensure the accuracy of the information contained in this publication but no liability can be accepted for any loss or damage whether direct, indirect or consequential arising out of the use of the information contained herein.

PUB BU/P2 17987/2 EN · November 2019

Certain image(s) used under license from Shutterstock.com.