WIRING DIAGRAM

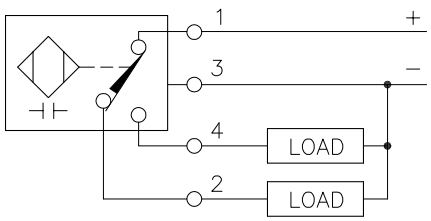

OUTPUT: VP4X2

SHORT–CIRCUIT AND OVERLOAD PROTECTED

SPECIFICATIONS

OPERATING VOLTAGE	10–65 VDC
RIPPLE	≤10%
DIFFERENTIAL TRAVEL (HYSTERESIS)	2–20% (5% TYPICAL)
VOLTAGE DROP ACROSS CONDUCTING SENSOR	≤ 1.8 V at 200 mA
OUTPUT FUNCTION	COMPLEMENTARY OUTPUT ONE N.O., ONE N.C. (SPDT)
TTL COMPATIBLE	NO
SHORT–CIRCUIT PROTECTED	YES
TRIGGER CURRENT FOR OVERLOAD PROTECTION	≥220 mA
CONTINUOUS LOAD CURRENT	≤200 mA
LEAKAGE (OFF–STATE) CURRENT	<10µA
NO–LOAD CURRENT	6.0–12.0 mA
TIME DELAY BEFORE AVAILABILITY	≤60 ms
LOAD and WIRE CAPACITANCE	0.33 µf
POWER–ON EFFECT PROTECTION	INCORPORATED
REVERSE POLARITY PROTECTION	INCORPORATED
WIRE–BREAK PROTECTION	INCORPORATED
PROTECTION AGAINST TRANSIENTS	EN 60947–5–2
OPERATING TEMPERATURE	–25°C to +70°C (–13°F to +158°F)
ENCLOSURE	MEETS NEMA 1, 3, 4, 6, 13 AND IEC IP67
SHOCK	30 g, 11 ms
VIBRATION	55 Hz, 1 mm AMPLITUDE (IN ALL 3 PLANES)
LED FUNCTION	YELLOW: OUTPUT ENERGIZED GREEN: POWER ON
SENSING RANGE	20 mm = .787" (NOMINAL)
SWITCHING FREQUENCY	100 Hz
REPEATABILITY	≤2% of NOMINAL SENSING RANGE

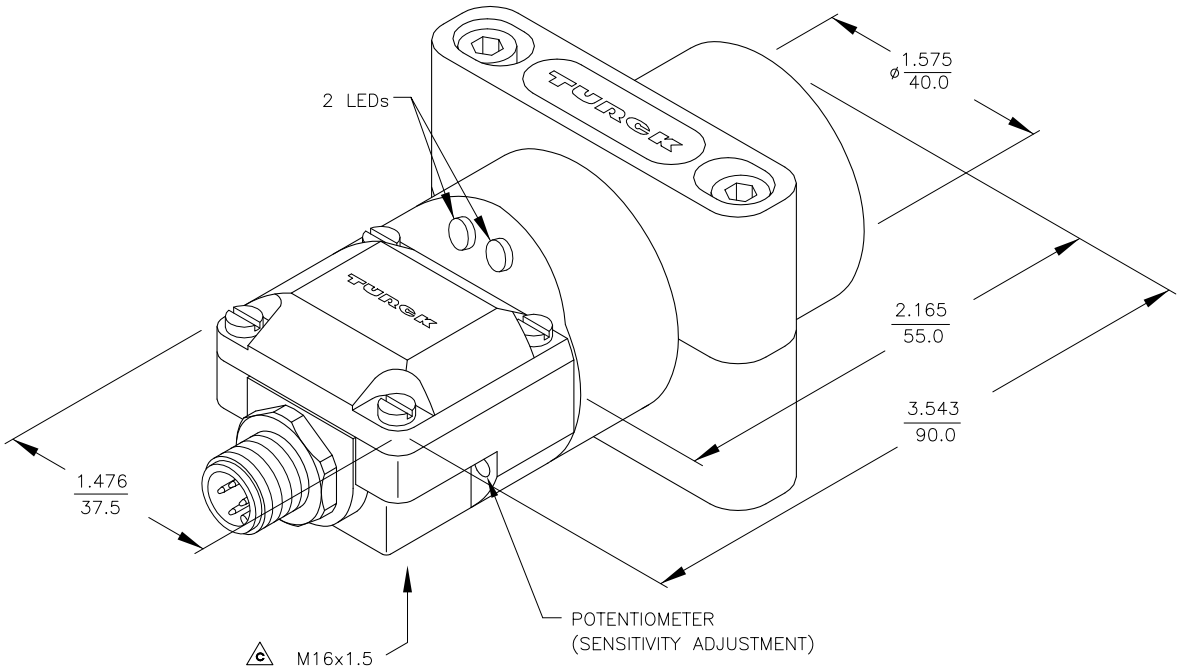

REV	DESCRIPTION	BY	DATE	ECO NO.
C	UPDATE THREADED PORT TO M16X1.5	RDS	12/23/04	12105

RELATED DOCUMENTS
1.
2.
3.
4.

3RD ANGLE PROJECTION

MATERIAL

FINISH

ALL DIMENSIONS DISPLAYED ON THIS DRAWING ARE FOR REFERENCE ONLY

CONTACT TURCK FOR MORE INFORMATION

THIS DRAWING IS PROPERTY OF TURCK INC. USE OF THIS DOCUMENT WITHOUT WRITTEN PERMISSION IS PROHIBITED.

TURCK INC
High Technology Sensors and Automation Controls
3000 CAMPUS DRIVE
MINNEAPOLIS, MN 55441
1–800–544–7769
(763) 553–7300
(763) 553–0708 fax
turck.com

DRFT CBM | DATE 5/21/97
DSGN | SCALE NONE

UNIT OF MEASUREMENT
INCH [MILLIMETER]
DO NOT SCALE THIS DRAWING

DESCRIPTION
BC20–K40SR–VP4X2–H1141

IDENTIFICATION NO. M2510091 | REV C

FILE: M2510091 | SHEET 1 OF 1