REV	DESCRIPTION	DATE

NOTES

MATERIAL	(ABS) FLAME RETARDANT UL94 V0 MATERIAL WITH BRASS INSERTS IN CORNER POSTS, (STYRENE) IS NON-FLAME RETARDANT WITHOUT BRASS INSERTS.
PARTS	(ABS) VERSION MACHINE SCREWS M3-0.5 x 10mm, REPLACEMENT PN 1591MS100 (100 / BAG), (STYRENE) VERSION SELF TAPPING #4 x 0.5", REPLACEMENT PN 1591TS100 (100 / BAG),
COLORS	(ABS) BLACK, & GRAY, (STYRENE) GRAY ONLY,

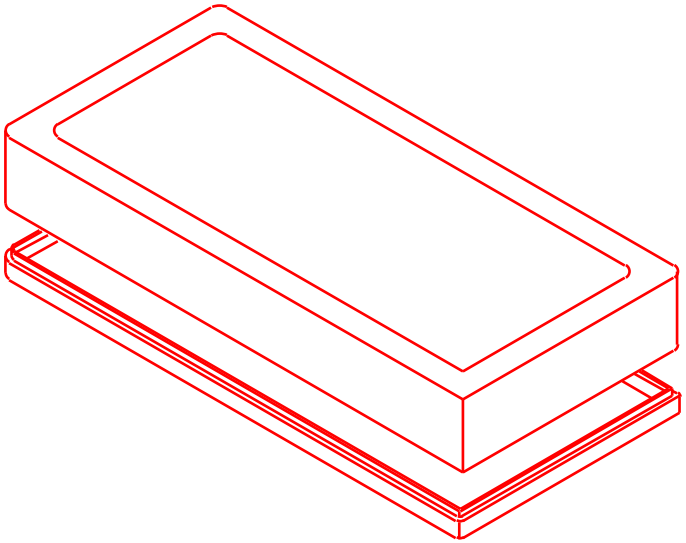

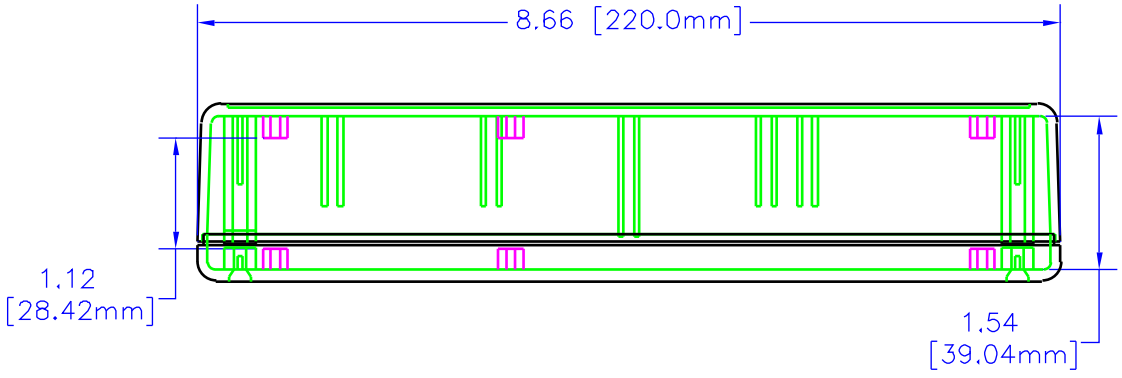

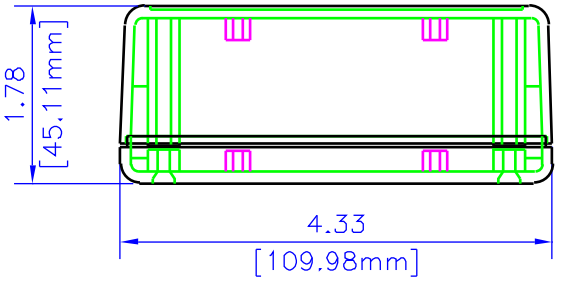

ASSEMBLED

UNLESS OTHERWISE SPECIFIED DIMENSIONS ARE IN INCHES

X	+/- .1
XX	+/- .02
XXX	+/- .015
CUTS	+/- .005
ANGLES	+/- .5 DEG.

NOTICE
HAMMOND CLAIMS PROPRIETARY RIGHTS TO THE MATERIAL ON THIS DRAWING. IT IS INTENDED TO BE USED AS A REFERENCE FOR ENGINEERING INFORMATION ONLY. THIS INFORMATION MAY NOT BE USED TO MANUFACTURE PRODUCT WITHOUT WRITTEN PERMISSION FROM HAMMOND MANUFACTURING

HAMMOND MANUFACTURING

WEB: WWW.HAMMONDMFG.COM

TITLE: HAMMOND 1599 SERIES PLASTIC ENCLOSURE

DRAWN BY	MJM
DATE	07/06/01
SCALE	
PAGE	1 OF 3
PART NUMBER	1599H

NOTES

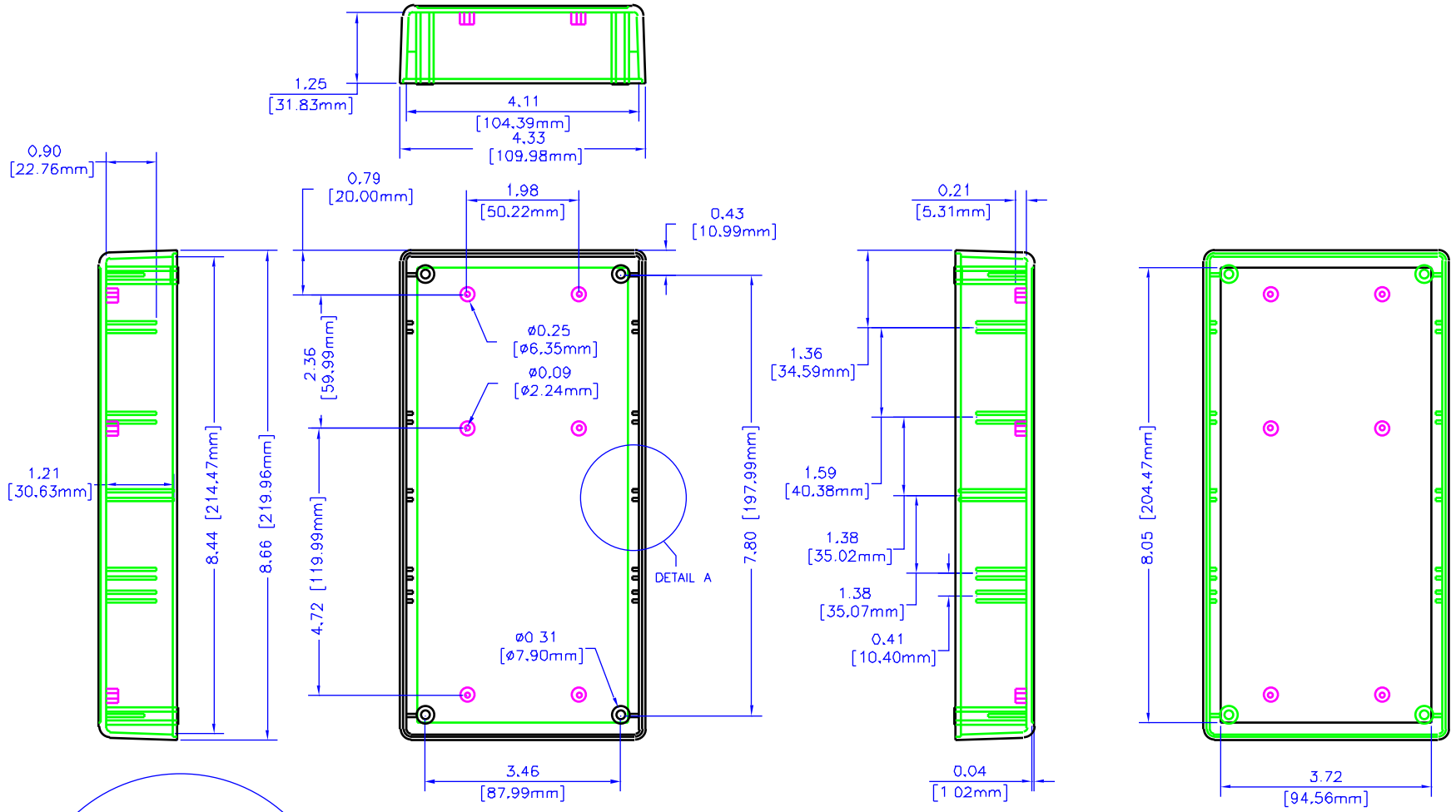

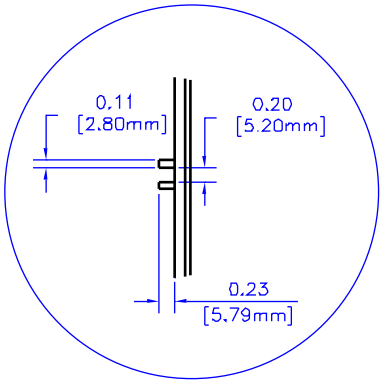

DETAIL A

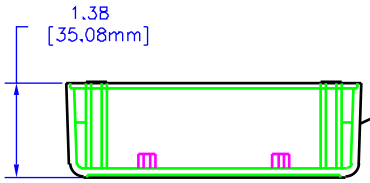

APPROXIMATE 2 DEG. DRAFT ANGLE

BOX

UNLESS OTHERWISE SPECIFIED DIMENSIONS ARE IN INCHES	
x	+/- .1
xx	+/- .02
xxx	+/- .015
CUTS	+/- .005
ANGLES	+/- 5 DEG

NOTICE

HAMMOND CLAIMS PROPRIETARY RIGHTS TO THE MATERIAL ON THIS DRAWING. IT IS INTENDED TO BE USED AS A REFERENCE FOR ENGINEERING INFORMATION ONLY. THIS INFORMATION MAY NOT BE USED TO MANUFACTURE PRODUCT WITHOUT WRITTEN PERMISSION FROM HAMMOND MANUFACTURING.

HAMMOND MANUFACTURING

WEB: WWW.HAMMONDMFG.COM

TITLE: HAMMOND 1599 SERIES PLASTIC ENCLOSURE

DRAWN BY	MJM
DATE	07/06/01
SCALE	
PAGE	2 OF 3
PART NUMBER	1599H

NOTES

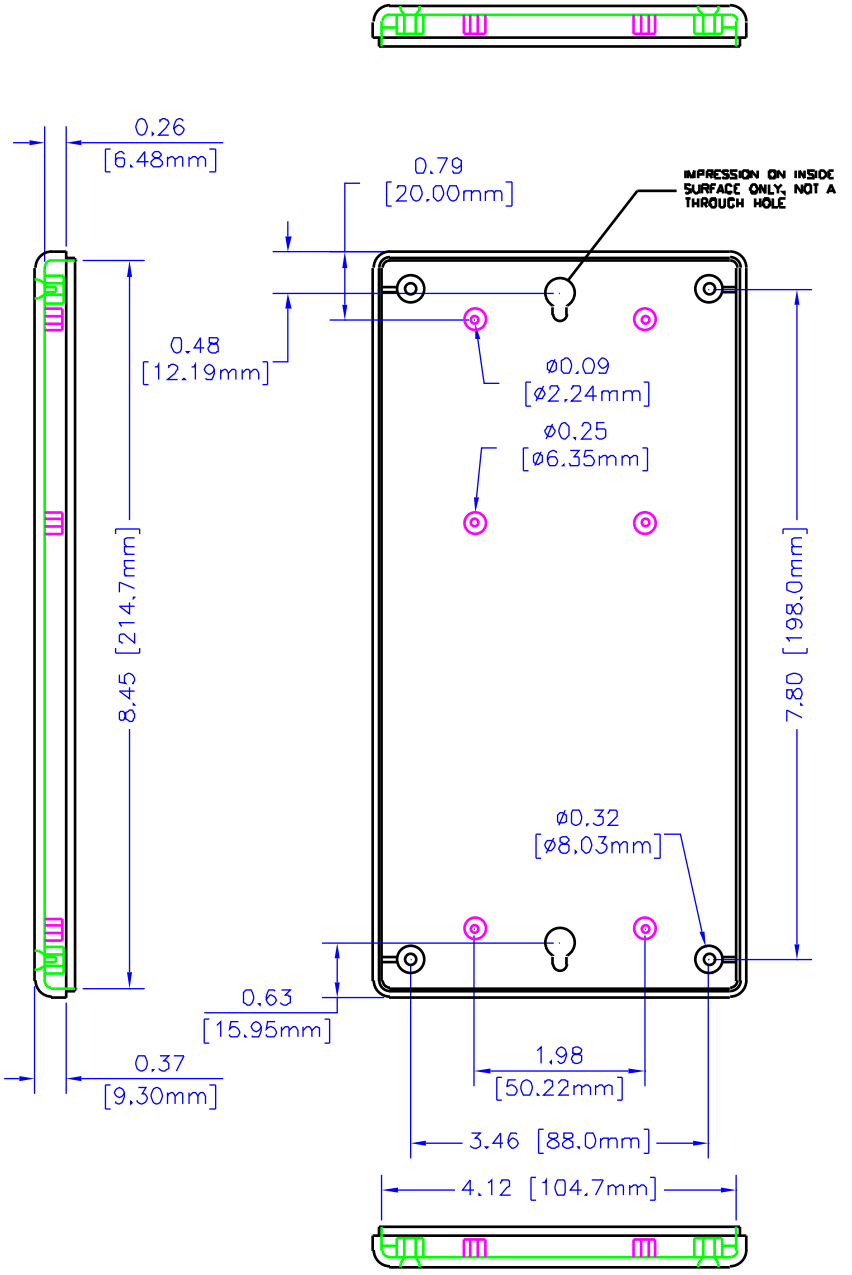

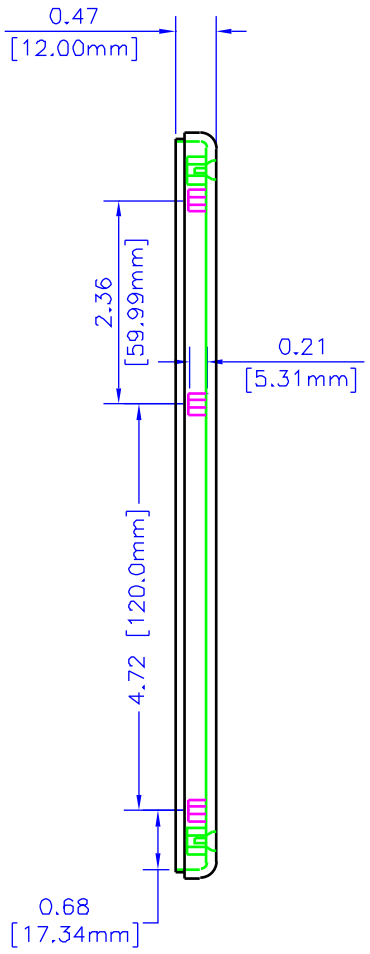

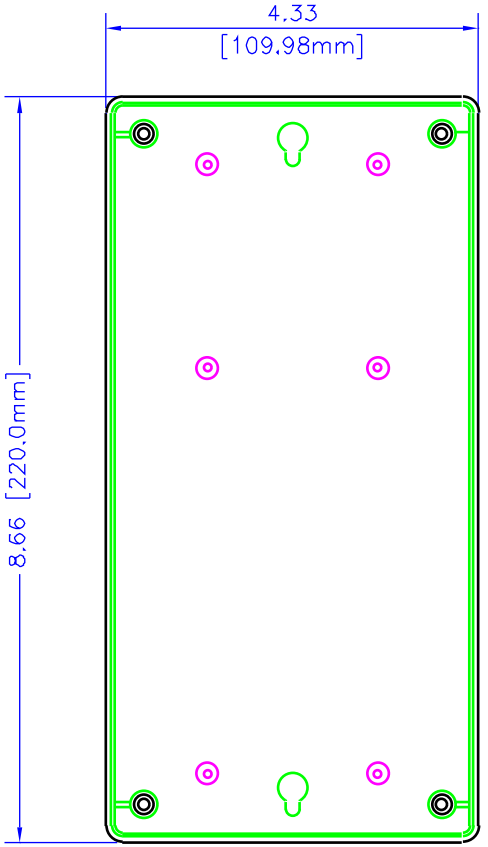

LID

UNLESS OTHERWISE SPECIFIED DIMENSIONS ARE IN INCHES

X	+/- .1
XX	+/- .02
XXX	+/- 0.16
CUTS	+/- .005
ANGLES	+/- .5 DEG.

NOTICE

HAMMOND CLAIMS PROPRIETARY RIGHTS TO THE MATERIAL ON THIS DRAWING. IT IS INTENDED TO BE USED AS A REFERENCE FOR ENGINEERING INFORMATION ONLY. THIS INFORMATION MAY NOT BE USED TO MANUFACTURE PRODUCT WITHOUT WRITTEN PERMISSION FROM HAMMOND MANUFACTURING.

HAMMOND MANUFACTURING

WEB: WWW.HAMMONDMFG.COM

TITLE: HAMMOND 1599 SERIES PLASTIC ENCLOSURE

DRAWN BY	MJM
DATE	07/06/01
SCALE	
PAGE	3 OF 3

PART NUMBER: 1599H