

Encoder WDGI 58B

www.wachendorff-automation.com/wdgi58b

Wachendorff Automation

... systems and encoders

- Complete systems
- Industrial rugged encoders to suit your application
- Standard range and customer versions
- Maximum permissible loads
- 48-hour express production
- Made in Germany
- Worldwide distributor network

IndustrieROBUST

Encoder WDGI 58B



- Rugged industrial standard encoder
- Housing cap die cast aluminum,
  with particularly eco-friendly powder coating
- Up to 25000 PPR by use of high grad electronics
- Protection to IP67, shaft sealed to IP65
- Maximum mechanical and electrical safety
- Full connection protection with 10 VDC up to 30 VDC
- High output frequency 600 kHz/2 MHz
- Optional:
  -40 °C up to +85 °C,
  Protection to IP67 all around,
  Pressure equalising membrane

www.wachendorff-automation.com/wdgi58b

Resolution	
Max. pulses per revolution PPR	up to 25000 PPR

Mechanical Data	
Housing	
Flange	clamping flange
Flange material	aluminum
Housing cap	die cast aluminum, powder coated
Housing	Ø 58 mm
Cam mounting	pitch 69 mm
Shaft(s)	
Shaft material	stainless steel
Starting torque	approx. 1 Ncm at ambient temperature
Shaft	Ø 10 mm
Shaft length	L: 20 mm
Max. Permissible shaft loading radial	220 N
Max. Permissible shaft loading axial	120 N
Bearings	
Bearings type	2 precision ball bearings
Nominale service life	1 x 10'9 revs. at 100 % rated shaft load 1 x 10'10 revs. at 40 % rated shaft load 1 x 10'11 revs. at 20 % rated shaft load
Max. operating speed	8000 rpm

Machinery Directive: basic data safety integrity level	
$MTTF_d$	200 a
Mission time (TM)	25 a
Nominale service life (L10h)	1 x 10'11 revs. at 20 % rated shaft load and 8000 rpm
Diagnostic coverage (DC)	0 %

Electrical Data	
Power supply VDC	10 - 30 VDC
Current consumption	typ. 70 mA
Signal shape	square-wave
Output circuit	HTL
Channels	AB, ABN
Output	push-pull
Load	max. 40 mA / channel
Signal level mA	at 20 mA
Signal level H>	H > Vcc - 2.5 VDC
Signal level L<	L < 2.5 VDC
Output frequency	max. 200 kHz
Circuit protection	yes
Light reserve warning	yes

General Data	
Weight	approx. 250 g
Connections	cable or connector outlet
Protection rating (EN 60529)	Housing: IP65, IP67; shaft sealed: IP65
Operating temperature	Connector: -20 °C up to +85 °C, cable: -20 °C up to +80 °C, (Option ACA: -40 °C up to +85 °C) 1 Vpp: -10 °C up to +70 °C
Storage temperature	Connector: -30 °C up to +85 °C, cable: -30 °C up to +80 °C, option ACA: -40 °C up to +85 °C

More Information
General technical data and safety instructions **http://www.wachendorff-automation.com/gtd**
Options **http://www.wachendorff-automation.com/acc**

WDGI 58B: Cable connection K3, L3, radial, with 2 m cable

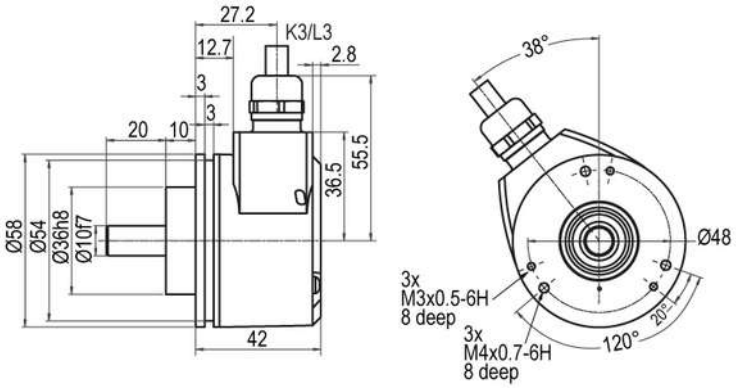

Description		ABN inv. poss.
K3	radial, shield not connected	•

Assignments	
	K3
Circuit	G24
GND	WH
(+) Vcc	BN
A	GN
B	YE
N	GY
Light reserve warning	PK
A inv.	-
B inv.	-
N inv.	-
Shield	flex

Example Order No.	Type						Your encoder
WDGI 58B	WDGI 58B						WDGI 58B
	Shaft						
10	10						10
	Pulses per revolution PPR:						
2	2, 10, 15, 20, 24, 25, 30, 36, 40, 48, 50, 60, 64, 72, 5, 87, 90, 100, 120, 125, 127, 128, 150, 160, 180, 200, 250, 256, 300, 314, 360, 400, 216, 236, 240, 254, 320, 512, 500, 571, 600, 625, 720, 750, 768, 800, 810, 900, 1000, 1024, 1200, 1250, 1270, 1440, 1500, 1800, 2000, 2048, 3000, 2400, 2500, 3600, 4000, 4096, 4685, 5000						
	Channels:						
ABN	ABN						ABN
	Output circuit						
G24	**Resolution PPR**	**Power supply VDC**	**Output circuit**		**Light reserve warning**	**Order key**	G24
	up to 5000	10 - 30	HTL		•	G24	
	Electrical connections						
K3	**Description**				**ABN inv. poss.**	**Order key**	K3
	Cable: length (2 m standard, WDG 58T: 1 m)						
	radial, shield not connected				•	K3	
	Options						
	Description				**Order key**		
	Without option				Empty		

Example Order No.=	WDGI 58B	10	2	ABN	G24	K3		WDGI 58B	10		ABN	G24	K3		Your encoder



For further information please contact our local distributor.
Here you find a list of our distributors worldwide.
http://www.wachendorff-automation.com/distributors_worldwide.html

WACHENDORFF

Wachendorff Automation GmbH & Co. KG
Industriestrasse 7 • D-65366 Geisenheim

Phone: +49 67 22 / 99 65 25
Fax: +49 67 22 / 99 65 70
E-Mail: wdg@wachendorff.de
www.wachendorff-automation.de