sferaco
VALVES & FITTINGS

REF. 680-681-682

BRASS BIBCOCK VALVES PN16







Size :	DN 1/2" to 1"
Ends :	Male, hose coupling
Min Temperature :	+ 0°C
Max Temperature :	+ 60°C
Max Pressure :	16 Bars
Specifications :	With hose coupling With manifold (excepted Ref.682) Flat steel handle, brass handle or key lever
Materials :	Brass

Sferaco 90 rue du Ruisseau 38297 St Quentin Fallavier Tel: + 33 (0) 474.94.15.90 Fax: + 33 (0) 474.95.62.08 Internet: www.sferaco.fr E-mail : sferaco@sferaco.fr

Information provided as an indication and subject to possible modification

BRASS BIBCOCK VALVES PN16

SPECIFICATIONS :

- With hose coupling
- With manifold (Excepted for Ref.682)
- Solid ball
- PTFE packing (Excepted for Ref.680)
- Red flat steel handle, brass handle or key lever

USE :

- Water distribution
- Min Temperature Ts : + 0°C
- Max Temperature Ts :+ 60°C
- Max Pressure Ps : 16 Bars

RANGE :

- Nickeled brass body bibcock valve BSP threaded with hose coupling and key lever **Ref. 680** from DN1/2" to 3/4"
- Key for key lever bibcock (6 mm square) **Ref. 9810401**
- Brass body bibcock valve BSP threaded with hose coupling and brass handle 2/3-1/3 **Ref. 681** DN 1/2"-3/4"
- Brass body bibcock valve BSP threaded with hose coupling and red flat steel handle **Ref. 682** from DN1/2" to 1"



- Locking device SFERALOCKING (without valve) **Ref. 9810404** (only for Ref.681 and 682 DN 1/2“)
- Passkey for locking device SFERALOCKING **Ref. 9810403**

Information provided as an indication and subject to possible modification

BRASS BIBCOCK VALVES PN16

MATERIALS BIBCOCK VALVE WITH KEY LEVER REF.680 :

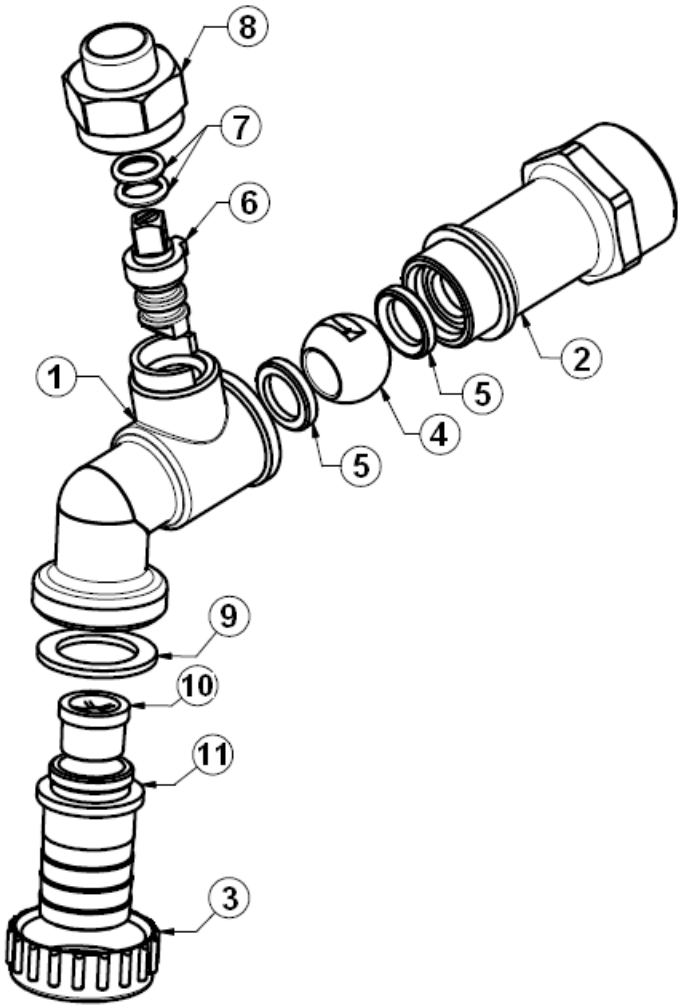

Item	Designation	Materials Ref.680
1	Body	Brass CW 617 N according to EN 12165 nickeled
2	Nipple	Brass CW 617 N according to EN 12165 nickeled
3	Nut	Brass CW 617 N according to EN 12165 nickeled
4	Ball	Brass CW 617 N according to EN 12165 chromed
5	Seat	PTFE
6	Stem	Brass CW 614 N according to EN 12164
7	O ring	NBR
8	Key lever	Brass CW 614 N according to EN 12164 nickeled
9	Gasket	NBR
10	Manifold	Polypropylene
11	Hose coupling	Brass CW 614 N according to EN 12164 nickeled

Information provided as an indication and subject to possible modification

BRASS BIBCOCK VALVES PN16

MATERIALS BIBCOCK VALVE WITH BRASS HANDLE REF.681 :

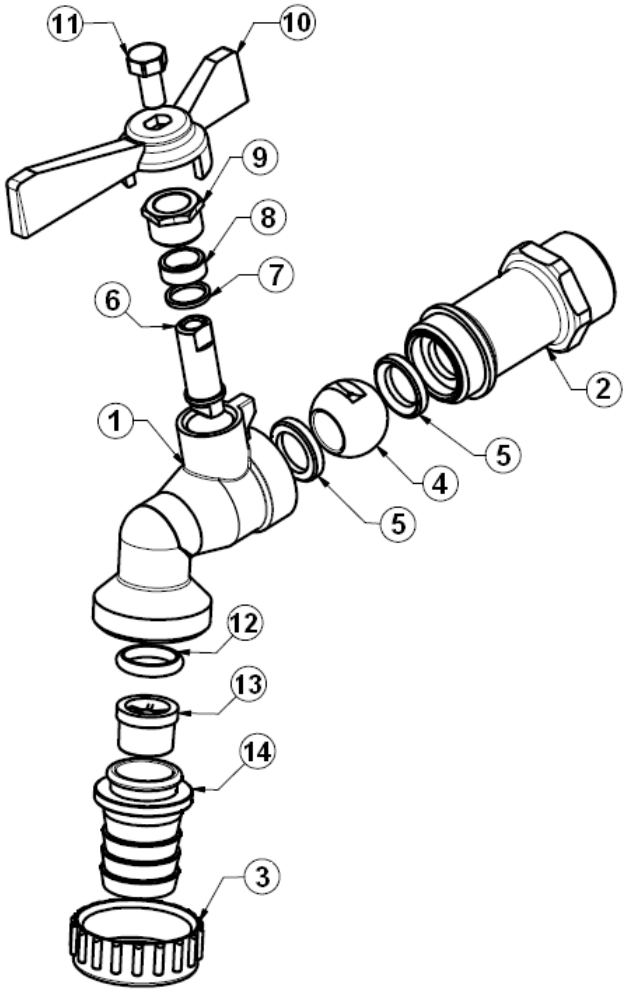

Item	Designation	Materials Ref.681
1	Body	Brass CW 617 N according to EN 12165
2	Nipple	Brass CW 617 N according to EN 12165
3	Nut	Brass CW 617 N according to EN 12165
4	Ball	Brass CW 617 N according to EN 12165 chromed
5	Seat	PTFE
6	Stem	Brass CW 614 N according to EN 12164
7	Ring	Brass CW 614 N according to EN 12164
8	Packing	PTFE
9	Packing nut	Brass CW 614 N according to EN 12164
10	Handle	Brass
11	Handle screw	Brass
12	Gasket	NBR
13	Manifold	Polypropylene
14	Hose coupling	Brass CW 614 N according to EN 12164

Information provided as an indication and subject to possible modification

BRASS BIBCOCK VALVES PN16

MATERIALS BIBOCK VALVE WITH FLAT STEEL HANDLE REF.682 :

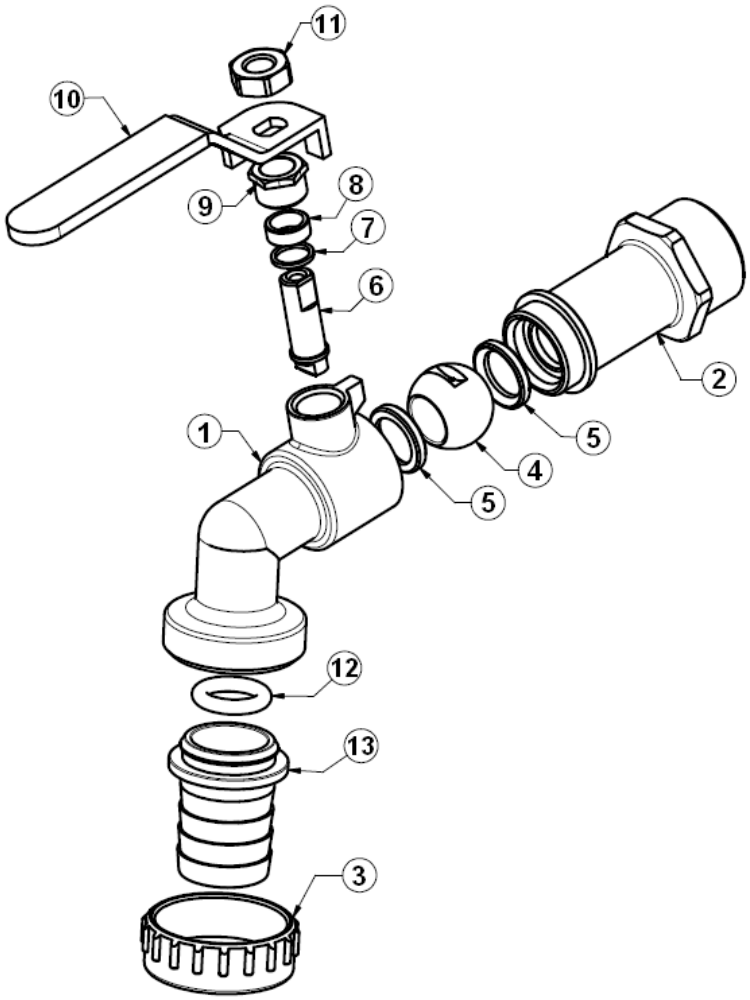

Item	Designation	Materials Ref.682
1	Body	Brass CW 617 N according to EN 12165
2	Nipple	Brass CW 617 N according to EN 12165
3	Nut	Brass CW 617 N according to EN 12165
4	Ball	Brass CW 617 N according to EN 12165 chromed
5	Seat	PTFE
6	Stem	Brass CW 614 N according to EN 12164
7	Ring	Brass CW 614 N according to EN 12164
8	Packing	PTFE
9	Packing nut	Brass CW 614 N according to EN 12164
10	Handle	Steel
11	Handle nut	Galvanized steel UNI 5589
12	Gasket	NBR
13	Hose coupling	Brass CW 614 N according to EN 12164

Information provided as an indication and subject to possible modification

BRASS BIBCOCK VALVES PN16

SIZE BIBCOCK VALVE WITH KEY LEVER REF.680 (in mm) :

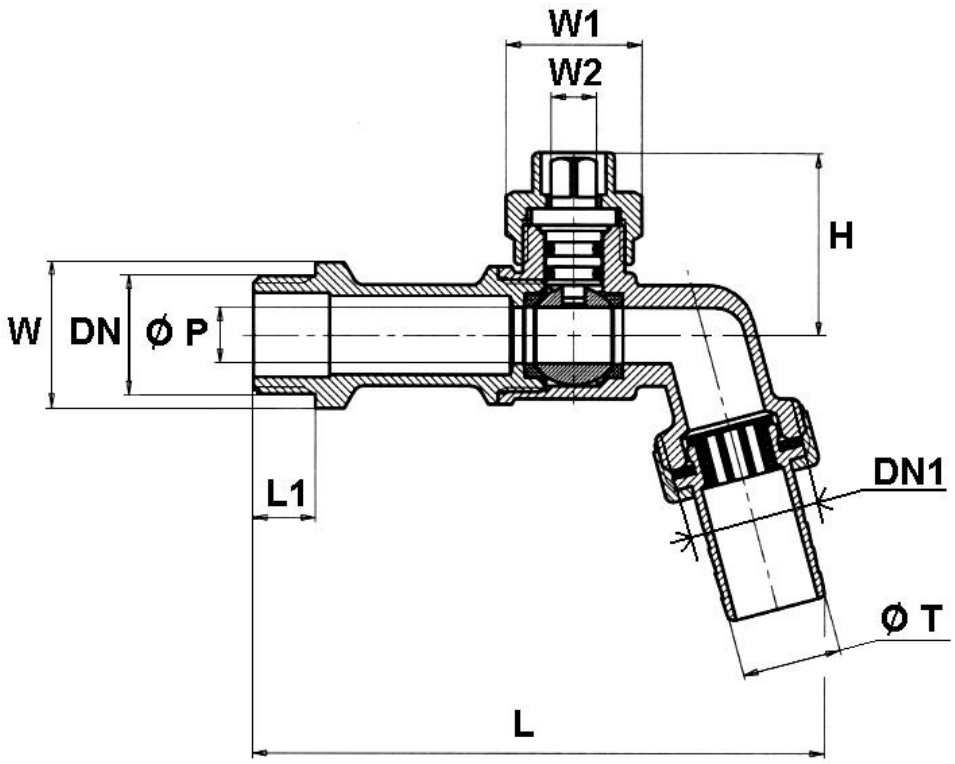

Ref.	DN	1/2"	3/4"
680	DN1	3/4“	3/4“
	Ø T	19	19
	Ø P	10	12
	L	101	102
	L1	11	12
	H	33	33
	W (on flat)	24	27
	W1 (on flat)	21	21
	W2 (on flat)	6	6
	Weight (Kg)	0.246	0.264

BRASS BIBCOCK VALVES PN16

SIZE BIBCOCK VALVE WITH BRASS HANDLE REF.681 (in mm) :

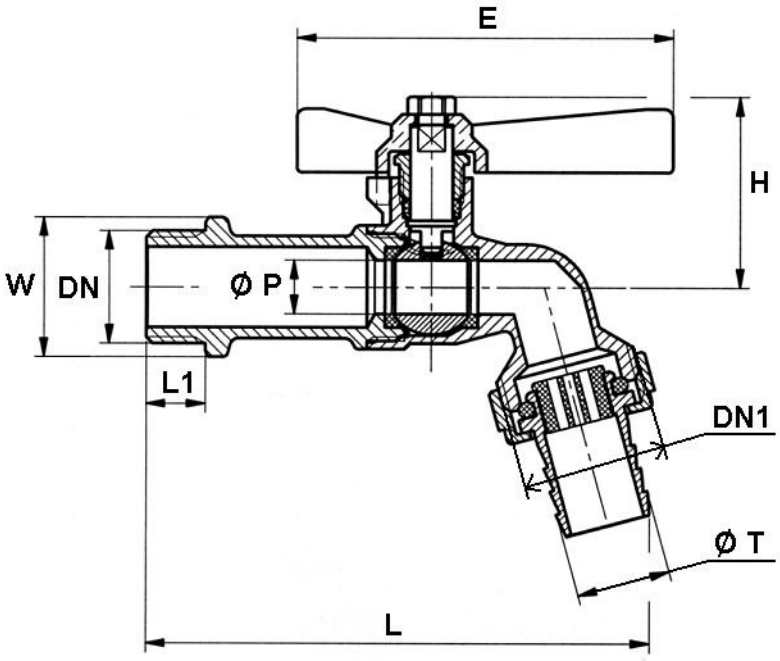

Ref.	DN	1/2"
681	DN1	3/4“
	Ø T	17
	Ø P	10
	L	90.5
	L1	11
	E	70
	H	35
	W (on flat)	24
	Weight (Kg)	0.223

Information provided as an indication and subject to possible modification

BRASS BIBCOCK VALVES PN16

SIZE BIBCOCK VALVE WITH FLAT STEEL HANDLE REF.682 (in mm) :

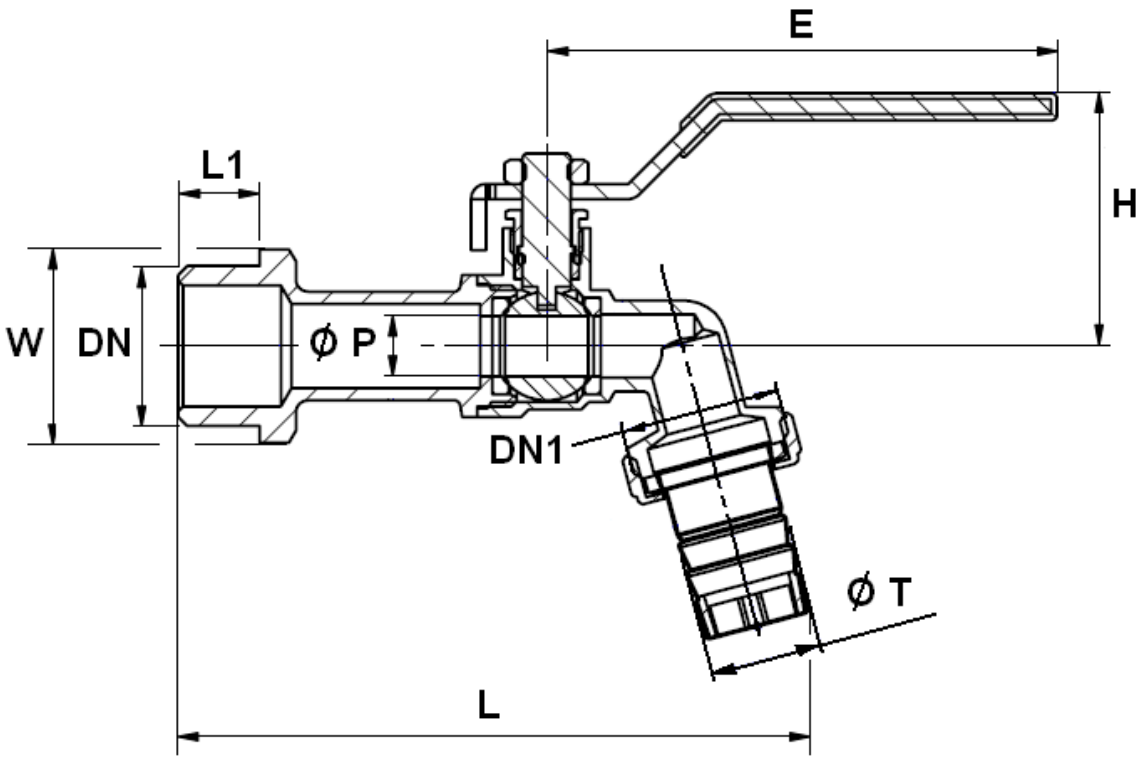

Ref.	DN	1/2"	1/2"	3/4“	3/4“	1“
682	DN1	3/4“	3/4“	3/4“	1“	1“1/4
	Ø T	15	17	19	22	26
	Ø P	10	10	12	12	15
	L	89.5	89.5	117.5	117.5	143.5
	L1	11.5	11.5	13	14	15
	E	82	82	90	82	82
	H	38	38	43	40	44
	W (on flat)	24	24	29	29	36
	Weight (Kg)	0.202	0.219	0.333	0.324	0.585

BRASS BIBCOCK VALVES PN16

STANDARDS :

- Fabrication according to ISO 9001 : 2008
- DIRECTIVE 97/23/CE : Products excluded from directive (Article 1, § 3.2)
- French water agreement **A.C.S. N° 13 ACC LY 152 (Only for Ref. 681 and 682)**
- Male BSP cylindrical threaded according to ISO 228-1

ADVICE : Our opinion and our advice are not guaranteed and SFERACO shall not be liable for the consequences of damages.
The customer must check the right choice of the products with the real service conditions.

BRASS BIBCOCK VALVES PN16

INSTALLATION INSTRUCTIONS

GENERAL GUIDELINES :

- Ensure that the valves to be used are appropriate for the conditions of the installation (type of fluid,pressure and temperature).
- Be sure to have enough valves to be able to isolate the sections of piping as well as the appropriate equipment for maintenance and repair.
- Ensure that the valves to be installed are of correct strenght to be able to support the capacity of their usage.
- **Installation of all circuits should ensure that their function can be automatically tested on a regular basis (at least two times a year).**

INSTALLATION INSTRUCTIONS :

- **Before installing the valves,clean and remove any objects from the pipes** (in particular bits of sealing and metal) which could obstruct and block the valves.

- **Ensure that both connecting pipes either side of the valve (upstream and downstream) are aligned (if they're not,the valves may not work correctly).**

- **Make sure that the two sections of the pipe (upstream and downstream) match,the valve unit will not absorb any gaps.Any distortions in the pipes may affect the thightness of the connection,the working of the valve and can even cause a rupture.**To be sure,place the kit in position to ensure the assembling will work.

- Before starting the fitting,ensure that the threads and tapping are clean.

- **If sections of piping do not have their final support in place,they should be temporarily fixed.This is to avoid unnecessary strain on the valve.**

- The theoretical lenghts given by ISO/R7 for the tapping are typically longer than required,the lenght of the thread should be limited, and **check that the end of the tube does not press right up to the head of the thread.**

- For the sealing assembly valve piping, it is essential to use products that are compatible with the requirements of the French water agreement ACS : **plumbers hemp proscribed**.
- Position the pipe clips on both sides of the valve.
- If mounting on an air conditioning with PER tubing and hoses,it is necessary to support the tubes and hoses with the fixing to avoid strain on the valve.
- When screwing the valve,ensure that you only rotate on screwed side by the 6 ended side.Use an open ended spanner or an adjustable spanner and not a monkey wrench.
- **Never use a vice to tighten the fixings of the valve.**
- Do not over tighten the valve.Do not block with any extensions as it may cause a rupture or weakening of the casing**.**

- **In general,for all valves used in buildings and heating,do not tighten above a torque of 30 Nm.**

The advice and assembly instructions above do not conform to any guarantee.
The information is given in general.It states what must not and must be done.
It is provided to ensure the safety of the personnel and the reliability of the valves.
The instructions in bold must be followed.

Sferaco 90 rue du Ruisseau 38297 St Quentin Fallavier Tel: + 33 (0) 474.94.15.90 Fax: + 33 (0) 474.95.62.08 Internet: www.sferaco.fr E-mail : sferaco@sferaco.fr

Information provided as an indication and subject to possible modification