JUMO GmbH & Co. KG
Delivery address: Mackenrodtstraße 14
36039 Fulda, Germany
Postal address: 36035 Fulda, Germany
Phone: +49 661 6003-0
Fax: +49 661 6003-607
Email: mail@jumo.net
Internet: www.jumo.net

JUMO Instrument Co. Ltd.
JUMO House
Temple Bank, Riverway
Harlow, Essex, CM20 2DY, UK
Phone: +44 1279 63 55 33
Fax: +44 1279 62 50 29
Email: sales@jumo.co.uk
Internet: www.jumo.co.uk

JUMO Process Control, Inc.
6733 Myers Road
East Syracuse, NY 13057, USA
Phone: +1 315 437 5866
Fax: +1 315 437 5860
Email: info.us@jumo.net
Internet: www.jumousa.com

Screw-in RTD temperature probe

With form B terminal head

- For temperatures between -50 to +600 °C
- Comes with replaceable measuring insert
- Available as single and double RTD temperature probe
- Terminal head form B, BUZ, BUZH, BBK, AB7, and KGI-1
- Available with transmitter



Brief description

Screw-in RTD temperature probes are predominantly used for measuring temperatures in liquids and gases. The reliable tightness of this installation type under negative pressure as well as overpressure is an important selection criterion. The application areas are, among others, in air-conditioning and refrigeration technology as well heater and furnace construction and apparatus engineering.

The terminal head is suitable for temperatures up to +100 °C. In addition to the standard form B connection head, the BUZ, BUZH, BBK, AB7, and KGI-1 design types are also available.

A Pt100 temperature sensor according to DIN EN 60751:2009 / IEC 60751:2008 (temperature coefficient $\alpha = 3.850 \times 10^{-3}\ °C^{-1}$), class B in two-wire circuit, is used as standard as the measuring insert; versions with Pt500 or Pt1000 are also possible. The connection is optionally possible in a three-wire and four-wire circuit. A transmitter can be integrated into the terminal head as an option.

Approvals and approval marks

JUMO GmbH & Co. KG
Delivery address: Mackenrodtstraße 14
36039 Fulda, Germany
Postal address: 36035 Fulda, Germany
Phone: +49 661 6003-0
Fax: +49 661 6003-607
Email: mail@jumo.net
Internet: www.jumo.net

JUMO Instrument Co. Ltd.
JUMO House
Temple Bank, Riverway
Harlow, Essex, CM20 2DY, UK
Phone: +44 1279 63 55 33
Fax: +44 1279 62 50 29
Email: sales@jumo.co.uk
Internet: www.jumo.co.uk

JUMO Process Control, Inc.
6733 Myers Road
East Syracuse, NY 13057, USA
Phone: +1 315 437 5866
Fax: +1 315 437 5860
Email: info.us@jumo.net
Internet: www.jumousa.com

Technical data

Terminal head	Form B DIN EN 50446, aluminum die-cast, M20 × 1.5; IP65, ambient temperature -40 to +100 °C Form BUZ, aluminum die-cast, M20 × 1.5; IP65, ambient temperature -40 to +100 °C Form BUZH, aluminum die-cast, M20 × 1.5; IP65, ambient temperature -40 to +100 °C Form BBK, plastic, M20 × 1.5; IP54, ambient temperature -30 to +130 °C Caution: reduced ambient temperature when using transmitters, data sheets 707010, 707030, 707050, 707060, and 707080
	Insofar as the design type allows it, yellow terminal heads are used for SIL and PL applications (extra codes 658 or 659). Exceptions to this are probes for use in alkaline environments and probes where it is strictly necessary that they are PWIS-free.
Extension tube	Stainless steel 1.4571, length 130 mm
Process connection	Thread, stainless steel 1.4571
Protection tube	Stainless steel 1.4571, Ø 9 mm, Ø 11 mm, Ø 12 mm
Measuring insert	Exchangeable, Pt100 temperature sensor, DIN EN 60751:2009 / IEC 60751:2008, class B, two-wire circuit
Response times	$t_{0.9}$ approx. 50 s, in water 0.2 m/s, Ø 9 mm
Vibration resistance	20 g (peak-to-peak) at the tip of the measuring insert
Transmitters	Programmable transmitter, data sheet 707010
	Analog transmitter, data sheet 707030
	Programmable transmitter, data sheet 707050
	Programmable two-channel transmitter with HART®/SIL, data sheet 707080
	Programmable Wtrans B head transmitter with wireless data transmission, data sheet 707060 (suitable Wtrans receivers according to data sheet 902931)
Accessories	Thermowell, data sheet 909710

JUMO GmbH & Co. KG
Delivery address: Mackenrodtstraße 14
36039 Fulda, Germany
Postal address: 36035 Fulda, Germany
Phone: +49 661 6003-0
Fax: +49 661 6003-607
Email: mail@jumo.net
Internet: www.jumo.net

JUMO Instrument Co. Ltd.
JUMO House
Temple Bank, Riverway
Harlow, Essex, CM20 2DY, UK
Phone: +44 1279 63 55 33
Fax: +44 1279 62 50 29
Email: sales@jumo.co.uk
Internet: www.jumo.co.uk

JUMO Process Control, Inc.
6733 Myers Road
East Syracuse, NY 13057, USA
Phone: +1 315 437 5866
Fax: +1 315 437 5860
Email: info.us@jumo.net
Internet: www.jumousa.com

Functional safety

With this product, JUMO provides a number of different possibilities in terms of functional safety to realize a completely or partially certified solution.

If you require consulting with regard to the safety integrity level (SIL) or performance level (PL), you can contact us at sil@jumo.net to arrange a personal appointment.

The safety data (MTBF, MTTFD, and FIT values) can also be accessed on demand for this item under sensors@jumo.net.

Approvals and approval marks

SIL	
Test facility	TÜV SÜD
Certificate/test no.	Z10 17 05 01028 001
Inspection basis	IEC 61508-1(ed.2) IEC 61508-2(ed.2) IEC 61508-3(ed.2) IEC 61508-4(ed.2)
Valid for	in conjunction with two-channel transmitter JUMO dTRANS T07 B SIL (type 707081)
SIL QUALIFIED	
Test facility	-
Certificate/test no.	-
Inspection basis	-
Valid for	Extra codes 658/659 in conjunction with declaration of manufacturer
PL QUALIFIED	
Test facility	-
Certificate/test no.	-
Inspection basis	-
Valid for	Extra codes 658/659 in conjunction with declaration of manufacturer

JUMO GmbH & Co. KG
Delivery address: Mackenrodtstraße 14
36039 Fulda, Germany
Postal address: 36035 Fulda, Germany
Phone: +49 661 6003-0
Fax: +49 661 6003-607
Email: mail@jumo.net
Internet: www.jumo.net

JUMO Instrument Co. Ltd.
JUMO House
Temple Bank, Riverway
Harlow, Essex, CM20 2DY, UK
Phone: +44 1279 63 55 33
Fax: +44 1279 62 50 29
Email: sales@jumo.co.uk
Internet: www.jumo.co.uk

JUMO Process Control, Inc.
6733 Myers Road
East Syracuse, NY 13057, USA
Phone: +1 315 437 5866
Fax: +1 315 437 5860
Email: info.us@jumo.net
Internet: www.jumousa.com

Dimensions

RTD temperature probe dimensions

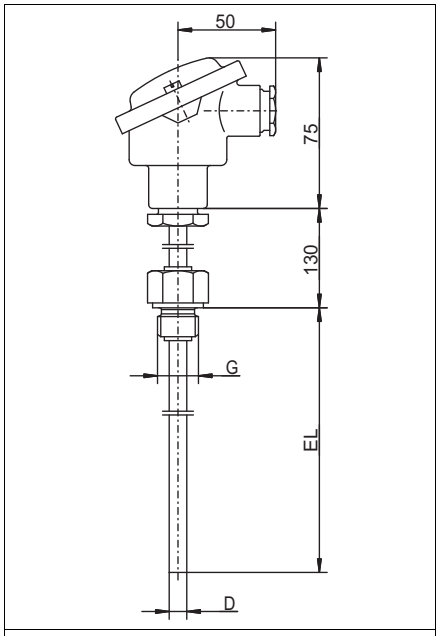

Basic type 902020/10

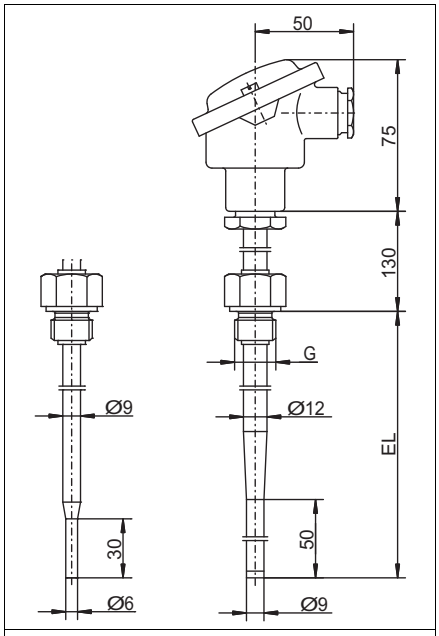

Basic type 902020/11

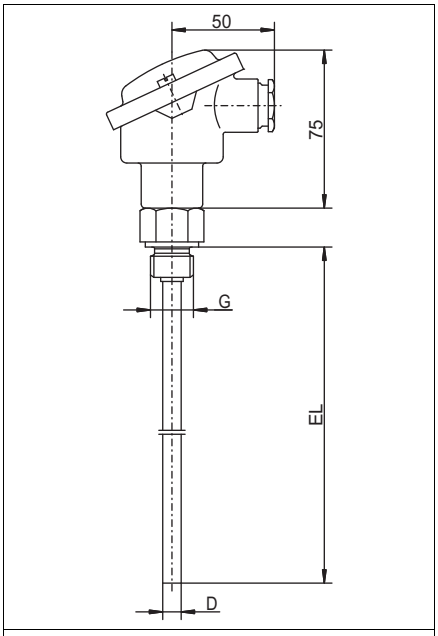

Basic type 902020/20

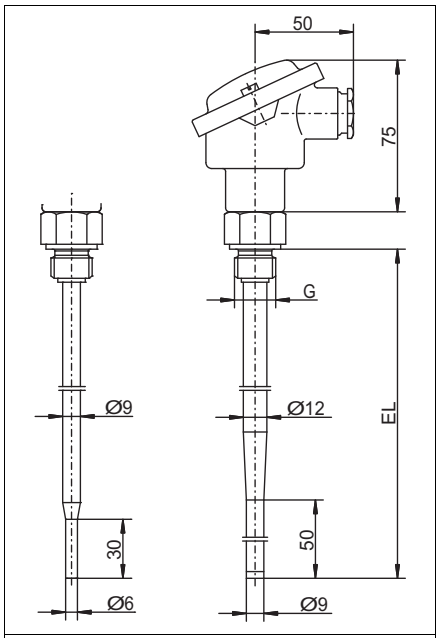

Basic type 902020/21

Insofar as the design type allows it, yellow terminal heads are used for SIL and PL applications (extra codes 658 or 659). Exceptions to this are probes for use in alkaline environments and probes where it is strictly necessary that they are PWIS-free.

JUMO GmbH & Co. KG
Delivery address: Mackenrodtstraße 14
36039 Fulda, Germany
Postal address: 36035 Fulda, Germany
Phone: +49 661 6003-0
Fax: +49 661 6003-607
Email: mail@jumo.net
Internet: www.jumo.net

JUMO Instrument Co. Ltd.
JUMO House
Temple Bank, Riverway
Harlow, Essex, CM20 2DY, UK
Phone: +44 1279 63 55 33
Fax: +44 1279 62 50 29
Email: sales@jumo.co.uk
Internet: www.jumo.co.uk

JUMO Process Control, Inc.
6733 Myers Road
East Syracuse, NY 13057, USA
Phone: +1 315 437 5866
Fax: +1 315 437 5860
Email: info.us@jumo.net
Internet: www.jumousa.com

Dimensions of the terminal heads

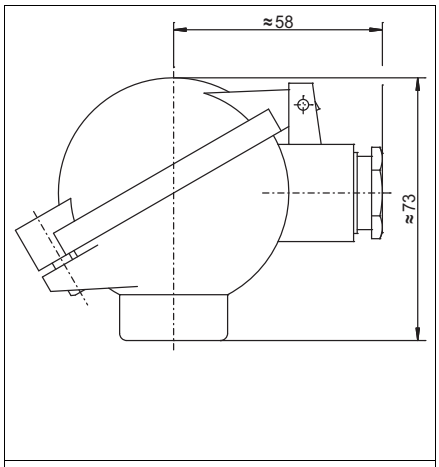

Terminal head form BUZ
Extra code 320

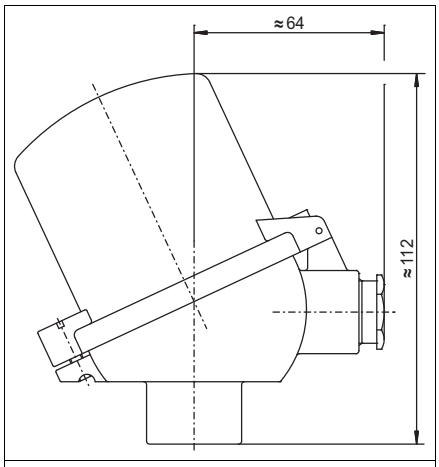

Terminal head form BUZH
Extra code 321

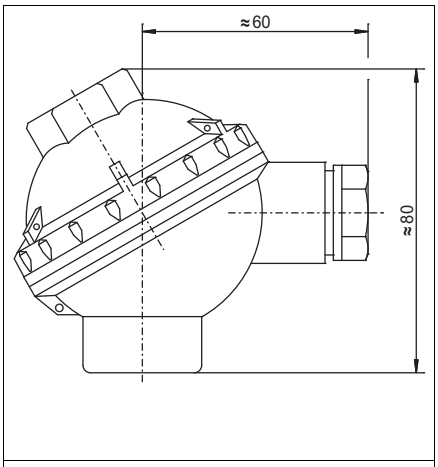

Terminal head form BBK
Extra code 322

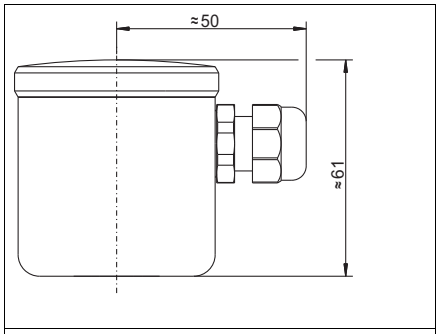

Terminal head form KGI-1
Extra code 326

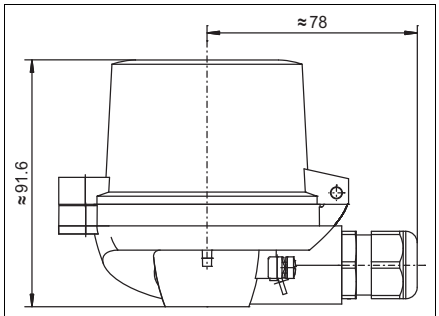

Terminal head form AB7
Extra code 924

Wtrans B – head transmitter with wireless data transmission

The Wtrans B head transmitter with wireless data transmission (data sheet 707060) is used in conjunction with a Wtrans receiver (data sheet 902931) for stationary or mobile acquisition of temperatures with RTD temperature probes or thermocouples.

The measured values are transmitted wirelessly to the receiver of the Wtrans measuring system. The measured values are displayed on the receiver and are available in digital format on the RS485 interface and as analog outputs. Alternatively, different alarms can be signaled with two relay outputs.

This head transmitter, designed for industrial applications, comprises a transmitter with integrated transmission unit and an antenna-battery housing. The transmitter is designed for mounting in form B terminal heads and works in an ambient temperature range of -30 to +85 °C.

The radio frequency of the Wtrans measuring system is 868.4 MHz. This frequency is largely impervious to external interference and allows data to be transmitted even in harsh industrial environments. When using the antenna holder for wall mounting with the 3 m antenna cable for the receiver, the open air range is 300 m.

A 3.6 V, 2.2 Ah (size AA) lithium battery is used for the head transmitter voltage supply.

A setup program is available as an accessory for easy configuration and parameterization of the head transmitter and the Wtrans receiver on a PC. The OnlineChart function can be used optionally to record the measured values on a PC.



JUMO GmbH & Co. KG
Delivery address: Mackenrodtstraße 14
36039 Fulda, Germany
Postal address: 36035 Fulda, Germany
Phone: +49 661 6003-0
Fax: +49 661 6003-607
Email: mail@jumo.net
Internet: www.jumo.net

JUMO Instrument Co. Ltd.
JUMO House
Temple Bank, Riverway
Harlow, Essex, CM20 2DY, UK
Phone: +44 1279 63 55 33
Fax: +44 1279 62 50 29
Email: sales@jumo.co.uk
Internet: www.jumo.co.uk

JUMO Process Control, Inc.
6733 Myers Road
East Syracuse, NY 13057, USA
Phone: +1 315 437 5866
Fax: +1 315 437 5860
Email: info.us@jumo.net
Internet: www.jumousa.com

Order details

			(1)	**Basic type**
		902020/10		Screw-in RTD temperature probe with extension tube, continuous protection tube 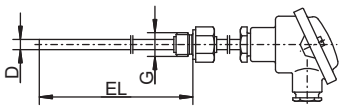
		902020/11		Screw-in RTD temperature probe with extension tube, reduced protection tube insertion length (EL) max. 700 mm 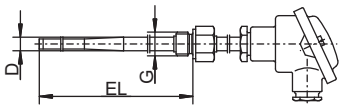
			(2)	**Operating temperature (additional versions upon request)**
x	x	386		-50 to +260 °C
x	x	402		-50 to +400 °C (standard)
x	x	415		-50 to +600 °C
			(3)	**Measuring insert (additional versions upon request)**
x	x	1001		1× Pt100 in three-wire circuit
x	x	1003		1× Pt100 in two-wire circuit
x	x	1011		1× Pt100 in four-wire circuit
x	x	2001		2× Pt100 in three-wire circuit
x	x	2003		2× Pt100 in two-wire circuit
			(4)	**Tolerance class according to DIN EN 60751:2009 / IEC 60751:2008 (additional versions upon request)**
x	x	1		Class B (standard) (-50 to +500 °C)
x	x	2		Class A (-30 to +300 °C)
			(5)	**Protection tube diameter D**
x		9		Ø 9 mm
	x	9		Ø 9 mm reduced to Ø 6 mm
x		11		Ø 11 mm
	x	12		Ø 12 mm reduced to Ø 9 mm
			(6)	**Insertion length EL in mm (EL up to 1000 mm)**
x	x	...		Specification in plain text
			(7)	**Process connection (additional versions upon request)**
x	x	104		Screw connection G 1/2
x	x	105		Screw connection G 3/4
x	x	106		Screw connection G 1
			(8)	**Extra codes**
x	x	000		None
x	x	306		Extension tube 70 mm (instead of 130 mm)
x	x	320		Terminal head form BUZ
x	x	321		Terminal head form BUZH
x	x	322		Terminal head form BBK
x	x	326		Terminal head form KGI-1
x	x	424		Terminal head with M12 machine connector (can only be selected in the case of measuring inserts with max. 4 wires, e.g. 1003, 1011, or 2003)
x	x	924		Terminal head form AB7 with LC plug-in display (only in conjunction with extra code 866 or 867)
x	x	925		Terminal head form BUZH with LC plug-in display (only in conjunction with extra code 866 or 867)
x	x	330		1× analog transmitter (type 707031 according to data sheet 707030), output 4 to 20 mA, (only for measuring insert 1× Pt100 in two-wire or three-wire circuit, not in conjunction with extra codes 658 or 659)
x	x	331		1× programmable transmitter (type 707014 according to data sheet 707010), output 4 to 20 mA/20 to 4 mA, (only for measuring insert 1× Pt100, not in conjunction with extra codes 658 or 659, suitable setup program part no. 00605080)
x	x	333		1× analog transmitter (type 707033 according to data sheet 707030), output 0 to 10 V, (only for measuring insert 1× Pt100 in two-wire or three-wire circuit, not in conjunction with extra codes 658 or 659)

JUMO GmbH & Co. KG
Delivery address: Mackenrodtstraße 14
36039 Fulda, Germany
Postal address: 36035 Fulda, Germany
Phone: +49 661 6003-0
Fax: +49 661 6003-607
Email: mail@jumo.net
Internet: www.jumo.net

JUMO Instrument Co. Ltd.
JUMO House
Temple Bank, Riverway
Harlow, Essex, CM20 2DY, UK
Phone: +44 1279 63 55 33
Fax: +44 1279 62 50 29
Email: sales@jumo.co.uk
Internet: www.jumo.co.uk

JUMO Process Control, Inc.
6733 Myers Road
East Syracuse, NY 13057, USA
Phone: +1 315 437 5866
Fax: +1 315 437 5860
Email: info.us@jumo.net
Internet: www.jumousa.com

x	x	334	2× analog transmitters (type 707031 according to data sheet 707030), output 4 to 20 mA, (only for measuring insert 2× Pt100 in two-wire or three-wire circuit and with extra code 321, not in conjunction with extra codes 658 or 659)
x	x	335	2× programmable transmitters (type 707014 according to data sheet 707010), output 4 to 20 mA/20 to 4 mA, (only for measuring insert 2× Pt100 and with extra code 321, not in conjunction with extra codes 658 or 659, suitable setup program part no. 00605080)
x	x	337	2× analog transmitters (type 707033 according to data sheet 707030), output 0 to 10 V, (only for measuring insert 2× Pt100 in two-wire or three-wire circuit and with extra code 321, not in conjunction with extra codes 658 or 659)
x	x	550	1× programmable transmitter (type 707050 according to data sheet 707050), output 4 to 20 mA/20 to 4 mA (USB), (only for measuring insert 1× Pt100, not in conjunction with extra codes 658 or 659, suitable setup program part no. 00574959)
x	x	551	2× programmable transmitters (type 707050 according to data sheet 707050), output 4 to 20 mA/20 to 4 mA (USB), (only for measuring insert 2× Pt100 and with extra code 321, not in conjunction with extra codes 658 or 659, suitable setup program part no. 00574959)
x	x	859	1× programmable head transmitter Wtrans B with wireless data transmission (type 707060 according to data sheet 707060), (not in conjunction with extra codes 658 or 659, suitable setup program part no. 00488887)
x	x	866	1× programmable two-channel transmitter with HART® (type 707080 according to data sheet 707080), output 4 to 20 mA, (not in conjunction with extra codes 658 or 659, suitable software available for free – Device Type Manager (DTM) for PACTware)
x	x	867	1× programmable two-channel transmitter with HART®/SIL (type 707081 according to data sheet 707080), output 4 to 20 mA, (not in conjunction with extra codes 658 or 659, suitable software available for free – Device Type Manager (DTM) for PACTware)
x	x	658	SIL and PL compatible (only in conjunction with JUMO SIL-certified safety temperature limiters and monitors according to data sheet 701150, not in conjunction with extra codes 330, 331, 333, 334, 335, 337, 550, 551, 859, 866, and 867)
x	x	659	SIL and PL compatible (only in conjunction with dTRANS T06 temperature transmitter according to data sheet 707071, not in conjunction with extra codes 330, 331, 333, 334, 335, 337, 550, 551, 859, 866, and 867)

Note: For extra code transmitter please specify measuring range and, if applicable, output signal in plain text.

	(1)		(2)		(3)		(4)		(5)		(6)		(7)		(8)	
Order code		-		-		-		-		-		-		/		, ...[a]
Order example	902020/10	-	402	-	1003	-	1	-	9	-	250	-	104	/	000	

[a] List extra codes in sequence and separate using commas.

JUMO GmbH & Co. KG
Delivery address: Mackenrodtstraße 14
36039 Fulda, Germany
Postal address: 36035 Fulda, Germany
Phone: +49 661 6003-0
Fax: +49 661 6003-607
Email: mail@jumo.net
Internet: www.jumo.net

JUMO Instrument Co. Ltd.
JUMO House
Temple Bank, Riverway
Harlow, Essex, CM20 2DY, UK
Phone: +44 1279 63 55 33
Fax: +44 1279 62 50 29
Email: sales@jumo.co.uk
Internet: www.jumo.co.uk

JUMO Process Control, Inc.
6733 Myers Road
East Syracuse, NY 13057, USA
Phone: +1 315 437 5866
Fax: +1 315 437 5860
Email: info.us@jumo.net
Internet: www.jumousa.com

			(1)	**Basic type**
		902020/20		Screw-in RTD temperature probe without extension tube, continuous protection tube 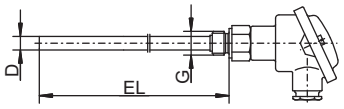
		902020/21		Screw-in RTD temperature probe without extension tube, reduced protection tube, insertion length (EL) max. 700 mm 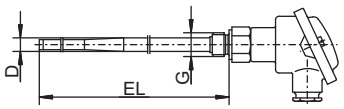
			(2)	**Operating temperature (additional versions upon request)**
x	x	386		-50 to +260 °C
x	x	402		-50 to +400 °C (standard)
x	x	415		-50 to +600 °C
			(3)	**Measuring insert (additional versions upon request)**
x	x	1001		1× Pt100 in three-wire circuit
x	x	1003		1× Pt100 in two-wire circuit
x	x	1011		1× Pt100 in four-wire circuit
x	x	2001		2× Pt100 in three-wire circuit
x	x	2003		2× Pt100 in two-wire circuit
			(4)	**Tolerance class according to DIN EN 60751:2009 / IEC 60751:2008 (additional versions upon request)**
x	x	1		Class B (standard) (-50 to +500 °C)
x	x	2		Class A (-30 to +300 °C)
			(5)	**Protection tube diameter D**
x		9		Ø 9 mm
	x	9		Ø 9 mm reduced to Ø 6 mm
x		11		Ø 11 mm
	x	12		Ø 12 mm reduced to Ø 9 mm
			(6)	**Insertion length EL in mm (EL up to 1000 mm)**
x	x	...		Specification in plain text
			(7)	**Process connection (additional versions upon request)**
x	x	104		Screw connection G 1/2
x	x	105		Screw connection G 3/4
x	x	106		Screw connection G 1
			(8)	**Extra codes**
x	x	000		None
x	x	320		Terminal head form BUZ
x	x	321		Terminal head form BUZH
x	x	322		Terminal head form BBK
x	x	326		Terminal head form KGI-1
x	x	424		Terminal head with M12 machine connector (can only be selected in the case of measuring inserts with max. 4 wires, e.g. 1003, 1011, or 2003)
x	x	924		Terminal head form AB7 with LC plug-in display (only in conjunction with extra code 866 or 867)
x	x	925		Terminal head form BUZH with LC plug-in display (only in conjunction with extra code 866 or 867)
x	x	330		1× analog transmitter (type 707031 according to data sheet 707030), output 4 to 20 mA, (only for measuring insert 1× Pt100 in two-wire or three-wire circuit, not in conjunction with extra codes 658 or 659)
x	x	331		1× programmable transmitter (type 707014 according to data sheet 707010), output 4 to 20 mA/20 to 4 mA, (only for measuring insert 1× Pt100, not in conjunction with extra codes 658 or 659, suitable setup program part no. 00605080)
x	x	333		1× analog transmitter (type 707033 according to data sheet 707030), output 0 to 10 V, (only for measuring insert 1× Pt100 in two-wire or three-wire circuit, not in conjunction with extra codes 658 or 659)
x	x	334		2× analog transmitters (type 707031 according to data sheet 707030), output 4 to 20 mA, (only for measuring insert 2× Pt100 in two-wire or three-wire circuit and with extra code 321, not in conjunction with extra codes 658 or 659)

JUMO GmbH & Co. KG
Delivery address: Mackenrodtstraße 14
36039 Fulda, Germany
Postal address: 36035 Fulda, Germany
Phone: +49 661 6003-0
Fax: +49 661 6003-607
Email: mail@jumo.net
Internet: www.jumo.net

JUMO Instrument Co. Ltd.
JUMO House
Temple Bank, Riverway
Harlow, Essex, CM20 2DY, UK
Phone: +44 1279 63 55 33
Fax: +44 1279 62 50 29
Email: sales@jumo.co.uk
Internet: www.jumo.co.uk

JUMO Process Control, Inc.
6733 Myers Road
East Syracuse, NY 13057, USA
Phone: +1 315 437 5866
Fax: +1 315 437 5860
Email: info.us@jumo.net
Internet: www.jumousa.com

x	x	335	2× programmable transmitters (type 707014 according to data sheet 707010), output 4 to 20 mA/20 to 4 mA, (only for measuring insert 2× Pt100 and with extra code 321, not in conjunction with extra codes 658 or 659, suitable setup program part no. 00605080)
x	x	337	2× analog transmitters (type 707033 according to data sheet 707030), output 0 to 10 V, (only for measuring insert 2× Pt100 in two-wire or three-wire circuit and with extra code 321, not in conjunction with extra codes 658 or 659)
x	x	550	1× programmable transmitter (type 707050 according to data sheet 707050), output 4 to 20 mA/20 to 4 mA (USB), (only for measuring insert 1× Pt100, not in conjunction with extra codes 658 or 659, suitable setup program part no. 00574959)
x	x	551	2× programmable transmitters (type 707050 according to data sheet 707050), output 4 to 20 mA/20 to 4 mA (USB), (only for measuring insert 2× Pt100 and with extra code 321, not in conjunction with extra codes 658 or 659, suitable setup program part no. 00574959)
x	x	859	1× programmable head transmitter Wtrans B with wireless data transmission (type 707060 according to data sheet 707060), (not in conjunction with extra codes 658 or 659, suitable setup program part no. 00488887)
x	x	866	1× programmable two-channel transmitter with HART® (type 707080 according to data sheet 707080), output 4 to 20 mA, (not in conjunction with extra codes 658 or 659, suitable software available for free – Device Type Manager (DTM) for PACTware)
x	x	867	1× programmable two-channel transmitter with HART®/SIL (type 707081 according to data sheet 707080), output 4 to 20 mA, (not in conjunction with extra codes 658 or 659, suitable software available for free – Device Type Manager (DTM) for PACTware)
x	x	658	SIL and PL compatible (only in conjunction with JUMO SIL-certified safety temperature limiters and monitors according to data sheet 701150, not in conjunction with extra codes 330, 331, 333, 334, 335, 337, 550, 551, 859, 866, and 867)
x	x	659	SIL and PL compatible (only in conjunction with dTRANS T06 temperature transmitter according to data sheet 707071, not in conjunction with extra codes 330, 331, 333, 334, 335, 337, 550, 551, 859, 866, and 867)

Note: For extra code transmitter please specify measuring range and, if applicable, output signal in plain text.

	(1)		(2)		(3)		(4)		(5)		(6)		(7)		(8)	
Order code		-		-		-		-		-		-		/		, ...[a]
Order example	902020/20	-	402	-	1003	-	1	-	9	-	250	-	104	/	000	

[a] List extra codes in sequence and separate using commas.

Stock versions

Order code	Part no.
902020/10-402-1003-1-9-160-104/000	00055562
902020/10-402-1003-1-9-250-104/000	00055563
902020/10-402-1003-1-9-400-104/000	00055564
902020/10-402-2003-1-9-160-104/000	00055565
902020/10-402-2003-1-9-250-104/000	00055566
902020/10-402-2003-1-9-400-104/000	00055567
902020/10-402-1001-1-9-160-104/330 (0 to 100 °C)	00054616
902020/10-402-1001-1-9-160-104/330 (0 to 200 °C)	00087522
902020/10-402-1001-1-9-250-104/330 (0 to 200 °C)	00087527
902020/10-402-1001-1-9-400-104/331 (0 to 100 °C)	00335111

JUMO GmbH & Co. KG
Delivery address: Mackenrodtstraße 14
36039 Fulda, Germany
Postal address: 36035 Fulda, Germany
Phone: +49 661 6003-0
Fax: +49 661 6003-607
Email: mail@jumo.net
Internet: www.jumo.net

JUMO Instrument Co. Ltd.
JUMO House
Temple Bank, Riverway
Harlow, Essex, CM20 2DY, UK
Phone: +44 1279 63 55 33
Fax: +44 1279 62 50 29
Email: sales@jumo.co.uk
Internet: www.jumo.co.uk

JUMO Process Control, Inc.
6733 Myers Road
East Syracuse, NY 13057, USA
Phone: +1 315 437 5866
Fax: +1 315 437 5860
Email: info.us@jumo.net
Internet: www.jumousa.com

Accessories

Accessories for programmable two-wire transmitter, type 707010

Designation	Part no.
PC interface with USB/TTL converter	00456352
Special programming (standard measuring range 0 to 100 °C)	-
Setup program on CD-ROM, multilingual	00605080

Accessories for programmable two-wire transmitter, type 707050

Designation	Part no.
Setup program on CD-ROM, multilingual	00574959
USB cable, type A USB connector on Mini-B USB connector, length 3 m	00506252

Accessories for programmable Wtrans B head transmitter with wireless data transmission, type 707060

Designation	Part no.
Lithium battery 3.6 V, 2.2 Ah (size AA)	00547559
PC interface with USB/TTL converter	00456352
Setup program on CD-ROM, multilingual	00488887
Setup program including OnlineChart on CD-ROM, multilingual	00549067
OnlineChart activation	00549188

Accessories for programmable two-channel transmitter with HART®, type 707080 or programmable two-channel transmitter with HART®/SIL, type 707081

Designation	Part no.
HART® modem USB	00443447
JUMO dTRANS T07 B 707080 – Device Type Manager (DTM) software program	00687789

Trademark information

- HART® is a registered trademark of FieldComm Group Inc., Austin, TX 78759, US.