Product datasheet

Specifications



inductive sensor XS8 40x40x117 - PBT - Sn20 mm - 24..240VAC/DC - terminals

XS8C4A1MPN12

Discontinued on: 01 November 2020

Discontinued

XS8C4A1MPN12 has not been replaced. Please contact your customer care centre for more information.

Main

Range of product	Telemecanique Inductive proximity sensors XS
Series name	General purpose
Sensor type	Inductive proximity sensor
Device application	-
Sensor name	XS8
Sensor design	Form 40 x 40 x 117
Size	117 mm
Body type	Fixed
Detector flush mounting acceptance	Flush mountable
Material	Plastic
Enclosure material	PBT
Type of output signal	Discrete
Wiring technique	2-wire
[Sn] nominal sensing distance	20 mm
Discrete output function	1 NO or 1 NC programmable
Output circuit type	AC/DC
Electrical connection	Screw-clamp terminals, 4 x 1.5 mm²
[Us] rated supply voltage	24...240 V AC 50/60 Hz 24...240 V DC
Switching capacity in mA	5...200 mA DC 5...300 mA AC
IP degree of protection	IP67 conforming to IEC 60529 IP65 conforming to IEC 60529 IP69K conforming to DIN 40050

Complementary

Detection face	5 positions turret head
Front material	PBT
Operating zone	0…16 mm

Disclaimer: This documentation is not intended as a substitute for and is not to be used for determining suitability or reliability of these products for specific user applications

Differential travel	3...15% of Sr
Repeat accuracy	<= 3% of Sr
Cable entry number	1 tapped entry for 1/2" NPT cable gland
Status LED	Supply on: 1 LED (green) Output state: 1 LED (yellow)
Supply voltage limits	20…264 V AC/DC
Maximum residual current	1.5 mA open state 120 V 0.6 mA open state 24 V
Switching frequency	<= 25 Hz AC <= 50 Hz DC
Maximum voltage drop	<5.5 V (closed)
Maximum delay first up	7.5 ms
Maximum delay response	1.2 ms
Maximum delay recovery	1.8 ms
Marking	CE
Height	40 mm
Length	40 mm
Width	117 mm
Net weight	0.244 kg

Environment

Product certifications	CCC UL CSA
Ambient air temperature for operation	-25…70 °C
Ambient air temperature for storage	-40…85 °C
Vibration resistance	25 gn amplitude = +/- 2 mm (f = 10…55 Hz) conforming to IEC 60068-2-6
Shock resistance	50 gn for 11 ms conforming to EN 60068-2-27

Packing Units

Unit Type of Package 1	PCE
Number of Units in Package 1	1
Package 1 Weight	238.0 g
Package 1 Height	5 cm
Package 1 width	5 cm
Package 1 Length	14.3 cm

Offer Sustainability

Sustainable offer status	Green Premium product
REACh Regulation	REACh Declaration
EU RoHS Directive	Pro-active compliance (Product out of EU RoHS legal scope) EU RoHS Declaration
Mercury free	Yes
RoHS exemption information	Yes
Environmental Disclosure	Product Environmental Profile

Contractual warranty

Warranty	18 months

Product datasheet XS8C4A1MPN12

Dimensions Drawings

Dimensions

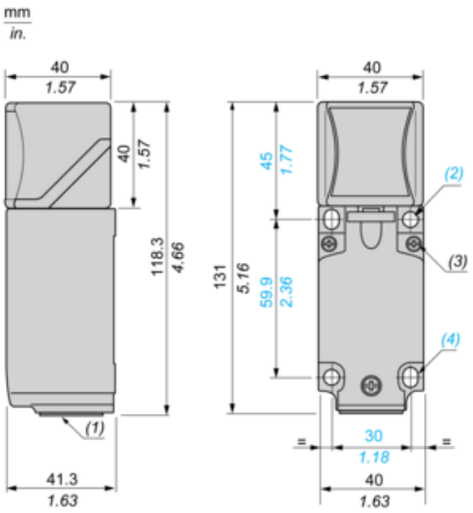

(1) : 1/2" NPT cable gland.

(2) : 2 holes Ø 5,45 mm / Ø 0.21 in. Tightening torque: < 1,5 Nm / < 13.3 lb-in.

(3) : 3 screws M3,5. Tightening torque: < 1,2 Nm / < 10.6 lb-in.

(4) : 2 alongated holes 5,4 x 7,4 mm / 0.21 x 0.29 in. Tightening torque: < 1,5 Nm / < 13.3 lb-in".

Mounting

Head Positions

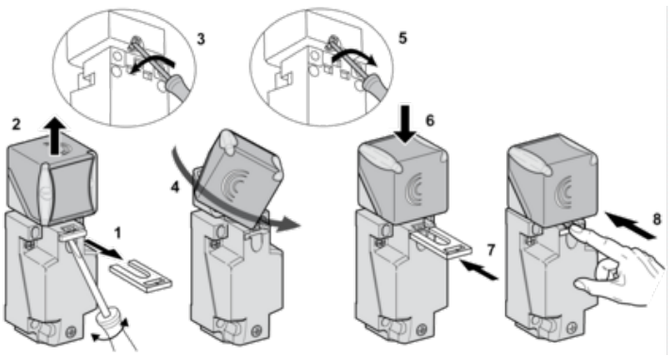

Setting-up Precautions

Minimum Mounting Distances (mm)

Side by Side

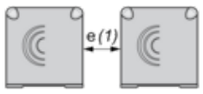

e (1) ≥ 80

Face to Face

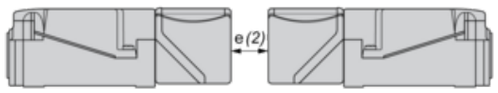

e (2) ≥ 160

Facing a Metal Object

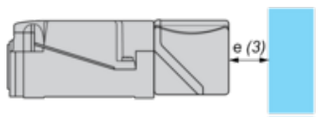

e (3) ≥ 60

Wiring Schemes

2-Wire AC or DC (Programmable)

