

INDUSTRIAL CONTROLS

Emergency Stop switch including enclosure with or without illuminated halo

With Illuminated Halo

1

A02ESI3B102IX0
Double pole positve break

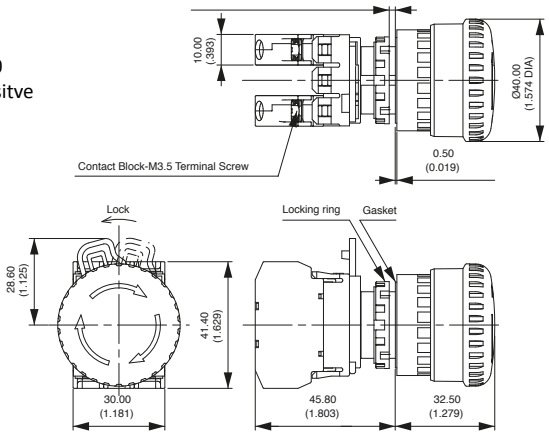

+

2

QH22L57YC
Yellow Halo 12/24VDC
Or
QH22L28RGC Red/Green Bi-Colour Halo 12/24VDC

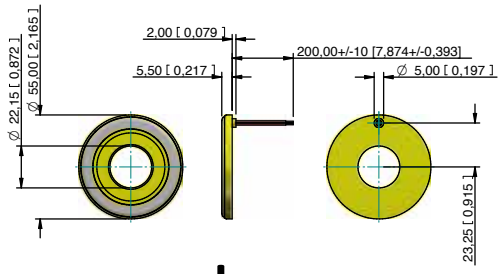

+

3

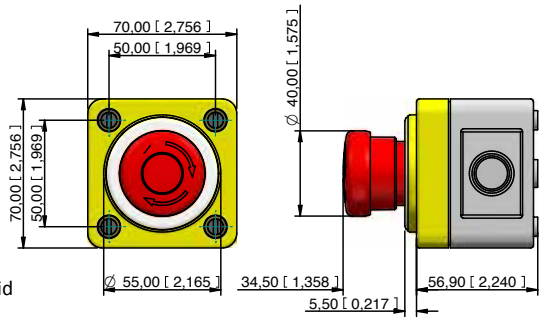

PEA01 Enclosure
Grey body with yellow lid

Without Illuminated Halo

1

A02ESI3B102IX0
Double pole positve break

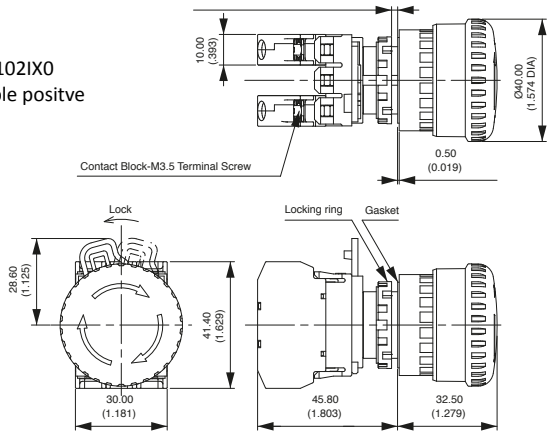

+

2

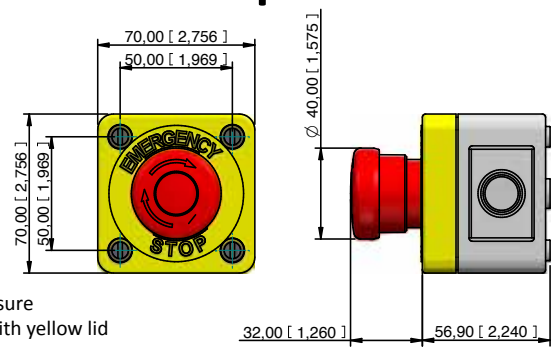

PEA01 Enclosure
Grey body with yellow lid

Part Number Detail

Industrial Emergency Stop Switch inc Enclosure
& Illuminated Yellow Halo Indicator, RS item number:- 1370020
APEM Part Number:- A02ESI3B102IX0+PEA01+QH22L57YC

Industrial Emergency Stop Switch inc Enclosure
& Illuminated Red/Green Halo Indicator, RS item number:- 1370021
APEM Part Number:- A02ESI3B102IX0+PEA01+QH22L28RGC

Industrial Emergency Stop Switch inc Enclosure
& Yellow Label, RS item number:- 1370022
APEM Part Number:- A02ESI3B102IX0+PEA01+A01YL5