O4S501

Through-beam sensor transmitter

O4S-OOKG/2M

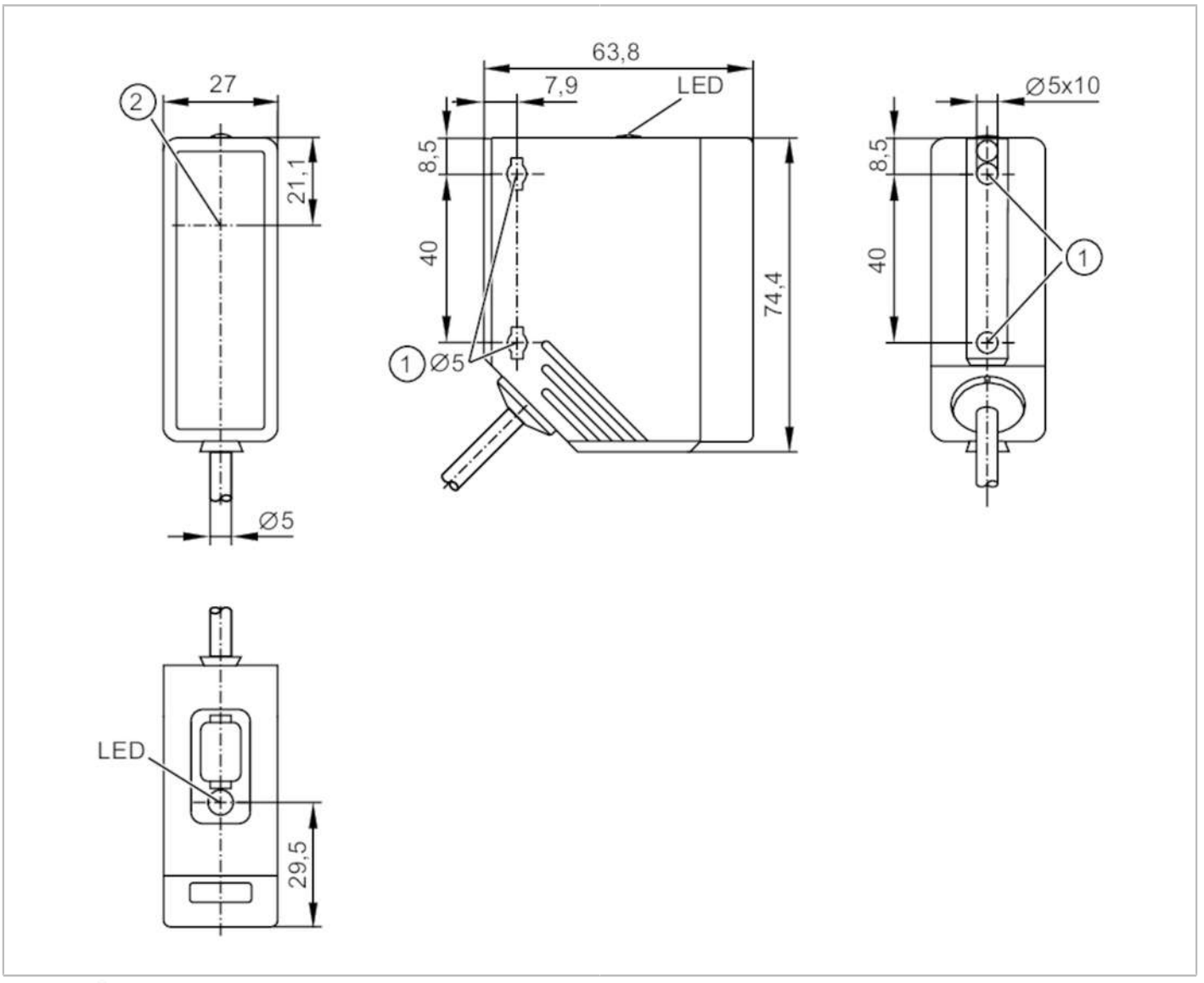

Product characteristics		
Type of light		red light
Housing		rectangular
Application		
Function principle		Through-beam sensor
Electrical data		
Operating voltage	[V]	10...36 DC
Current consumption	[mA]	20
Protection class		II
Reverse polarity protection		yes
Type of light		red light
Wave length	[nm]	624

O4S501

Through-beam sensor transmitter

O4S-OOKG/2M

Outputs			
Overload protection		yes	
Detection zone			
Transmitter / receiver		transmitter	
Range	[m]	0...80	
Range adjustable		no	
Max. light spot diameter	[mm]	2400	
Light spot dimensions refer to		at maximum range	
Operating conditions			
Ambient temperature	[°C]	-25...60	
Protection		IP 67	
Tests / approvals			
EMC		EN 60947-5-2	
MTTF	[years]	616	
Mechanical data			
Weight	[g]	205	
Housing		rectangular	
Dimensions	[mm]	74.4 x 27 x 63.8	
Materials		housing: PA; bezel: stainless steel; operator interface: TPE	
Lens material		PMMA	
Lens alignment		side lens	
Displays / operating elements			
Display	operation	1 x LED, green	
Remarks			
Remarks		operating voltage "supply class 2" according to cULus	
Pack quantity		1 pcs.	
Electrical connection			

Cable: 2 m, PUR; 3 x 0.34 mm²

Connection

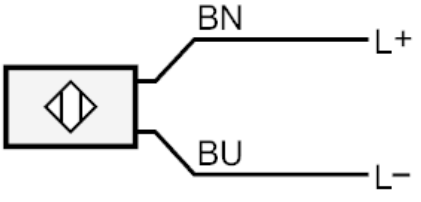

Core colours :
BN = brown
BU = blue

O4S501

Through-beam sensor transmitter

O4S-OOKG/2M

Diagrams and graphs

excess gain graph

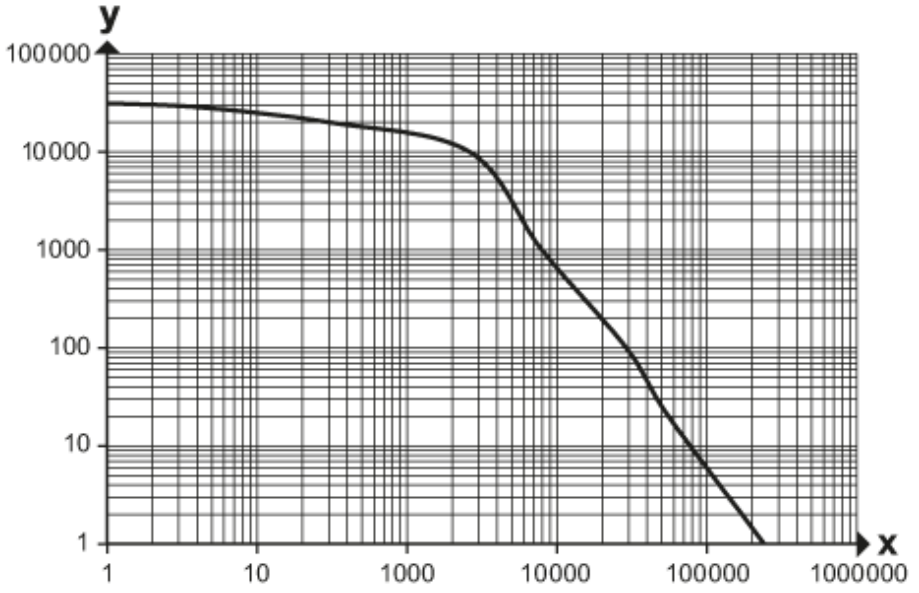

x: Abstand [mm]

y: Funktionsreservefaktor