Capsule pressure gauge, copper alloy
Stainless steel case
Model 612.20, NS 63 [2 ½"], 100 [4"], 160 [6"]

for further approvals, see page 7

Applications

- For gaseous, dry and non-aggressive media
- Medical, vacuum, environmental, laboratory technology, for contents measurement and filter monitoring

Special features

- Zero point correction in front
- Case from stainless steel
- Robust design and ingress protection IP54
- Low scale ranges from 0 ... 6 mbar to 0 ... 600 mbar or 0 ... 2.4 inH_2O to 0 ... 240 inH_2O

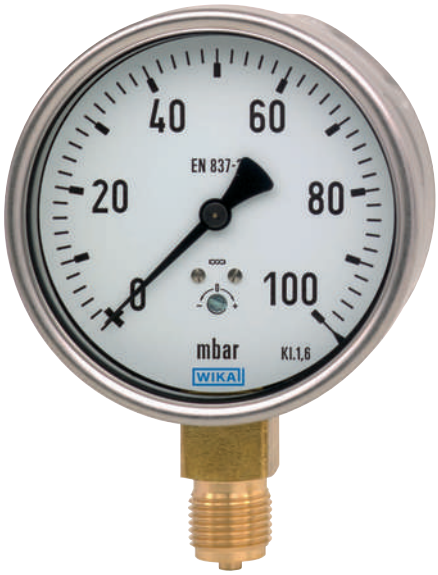

Capsule pressure gauge, model 612.20

Description

The model 612.20 capsule pressure gauge is based upon the proven capsule measuring system. The capsule element measurement principle is suitable for very low pressures. On pressurisation, the expansion of the capsule element, proportional to the incident pressure, is transmitted to the movement and indicated.

The modular design enables a multitude of combinations of case materials, process connections, nominal sizes and scale ranges. Due to this high variance, the instrument is suitable for use in a wide range of applications within industry.

The case and the bayonet bezel are made from stainless steel. The material of the process connection is a copper alloy.

For mounting in control panels, the capsule pressure gauges can, depending on the process connection, be fitted with a mounting flange or with a triangular profile ring and mounting bracket.

The scale ranges of 0 ... 6 mbar to 0 ... 600 mbar or 0 ... 2.4 inH_2O to 0 ... 240 inH_2O and the vacuum and +/- scale ranges ensure the measuring ranges required for a wide variety of applications.

Smart in sensing

Data sheets showing similar products:
Capsule pressure gauge, stainless steel; models 632.50 and 633.50, NS 63, 100, 160; see data sheet PM 06.03
Test gauge, copper alloy or stainless steel, for low pressure ranges up to 600 mbar, class 0.6; models 610.20 and 630.20, NS 160; see data sheet PM 06.09

Specifications

Basic information	
Standard	EN 837-3
	→ For information on the “Selection, installation, handling and operation of pressure gauges”, see technical information IN 00.05
Further version	■ Oil- and grease-free ■ For oxygen, oil- and grease-free
Nominal size (NS)	■ Ø 63 mm [2 ½"] ■ Ø 100 mm [4"] ■ Ø 160 mm [6"]
Connection location	■ Lower mount (radial) ■ Lower back mount ■ Centre back mount (only for NS 63 [2 ½"])
Window	Instrument glass
Case	
Design	■ Without blow-out device ■ With blow-out device in case back (only for NS 100 [4"] and NS 160 [6"])
Material	Stainless steel
Ring	Bayonet bezel, stainless steel
Mounting	■ Without ■ Surface mounting flange, stainless steel ■ Panel mounting flange, stainless steel ■ Panel mounting flange, polished stainless steel ■ Panel mounting flange, black stainless steel ■ Triangular profile ring with mounting bracket, stainless steel [1)] ■ Triangular profile ring with mounting bracket, polished stainless steel [1)]
	→ For information on “Mounting types, mounting flanges, panel cutouts”, see technical information IN 00.04
Movement	Copper alloy

1) Only for back mount

Measuring element	
Type of measuring element	Capsule element
Material (wetted)	
Capsule element	Copper alloy
Sealing	NBR
Process connection	Copper alloy
Leak tightness	■ Leakage rate: < $1 \cdot 10^{-3}$ mbar l/s ■ Helium tested, leakage rate: < $1 \cdot 10^{-5}$ mbar l/s

Accuracy specifications	
Accuracy class	
EN 837-3	■ Class 1.6 ■ Class 1.0 [1]
ASME B40.100	■ ±2 % | ±1 % | ±2 % of measuring span (grade A) ■ ±1 % of measuring span (grade 1A) [1]
Zero point setting with adjustment screw	■ In front, after opening the bayonet bezel [2] ■ In front, through the opening in the window [3]
Temperature error	On deviation from the reference conditions at the measuring system: ≤ ±0.6 % per 10 °C [≤ ±0.6 % per 18 °F] of full scale value
Reference conditions	
Ambient temperature	+20 °C [+68 °F]

1) Selectable for scale range ≥ 0 ... 40 mbar [0 ... 16 inH_2O]
2) For versions without mounting flange
3) For versions with mounting flange, the opening of the window for the zero point setting is sealed with a taper plug.

Scale ranges

mbar	
0 ... 6 [1]	0 ... 100
0 ... 10 [2]	0 ... 160
0 ... 16 [2]	0 ... 250
0 ... 25	0 ... 400
0 ... 40	0 ... 600
0 ... 60	

kg/cm²	
0 ... 0.006 [1]	0 ... 0.1
0 ... 0.01 [2]	0 ... 0.16
0 ... 0.016 [2]	0 ... 0.25
0 ... 0.025	0 ... 0.4
0 ... 0.04	0 ... 0.6
0 ... 0.06	

kPa	
0 ... 0.6 [1]	0 ... 10
0 ... 1 [2]	0 ... 16
0 ... 1.6 [2]	0 ... 25
0 ... 2.5	0 ... 40
0 ... 4	0 ... 60
0 ... 6	

Pa	
0 ... 600 [1]	0 ... 10,000
0 ... 1,000 [2]	0 ... 16,000
0 ... 1,600 [2]	0 ... 25,000
0 ... 2,500	0 ... 40,000
0 ... 4,000	0 ... 60,000
0 ... 6,000	

psi	
0 ... 0.1 [1]	0 ... 1.5
0 ... 0.15 [2]	0 ... 2.5
0 ... 0.25 [2]	0 ... 3.6
0 ... 0.36	0 ... 6.0
0 ... 0.6	0 ... 10
0 ... 1.0	

mmH_2O	
0 ... 60 [1]	0 ... 1,000
0 ... 100 [2]	0 ... 1,600
0 ... 160 [2]	0 ... 2,500
0 ... 250	0 ... 4,000
0 ... 400	0 ... 6,000
0 ... 600	

1) Only available for NS 160 [6"]
2) Only available for NS 100 [4"] and NS 160 [6"]

inH_2O	
0 ... 2.4 [1]	0 ... 40
0 ... 4 [2]	0 ... 60
0 ... 6 [2]	0 ... 100
0 ...10	0 ... 160
0 ... 16	0 ... 240
0 ... 24	

oz/in^2	
0 ... 1.5 [1]	0 ... 25
0 ... 2.5 [2]	0 ... 40
0 ... 4 [2]	0 ... 60
0 ... 6	0 ... 100
0 ... 10	0 ... 150
0 ... 15	

1) Only available for NS 160 [6"]
2) Only available for NS 100 [4"] and NS 160 [6"]

Vacuum and +/- scale ranges

mbar	
-6 … 0 [1]	-3 ... +3 [1]
-10 … 0 [2]	-5 ... +5 [2]
-16 … 0 [2]	-8 ... +8 [2]
-25 … 0	-12.5 ... +12.5
-40 … 0	-20 ... +20
-60 … 0	-30 ... +30
-100 … 0	-50 ... +50
-160 … 0	-80 ... +80
-250 … 0	-125 ... +125
-400 … 0	-200 ... +200
-600 ... 0	-300 ... +300

kg/cm^2	
-0.006 … 0 [1]	-0.003 ... +0.003 [1]
-0.01 … 0 [2]	-0.005 ... +0.005 [2]
-0.016 … 0 [2]	-0.008 ... +0.008 [2]
-0.025 … 0	-0.0125 ... +0.0125
-0.04 … 0	-0.02 ... +0.02
-0.06 … 0	-0.03 ... +0.03
-0.1 … 0	-0.05 ... +0.05
-0.16 … 0	-0.08 ... +0.08
-0.25 … 0	-0.125 ... +0.125
-0.4 … 0	-0.2 ... +0.2
-0.6 ... 0	-0.3 ... +0.3

kPa	
-0.6 … 0 [1]	-0.3 ... + 0.3 [1]
-1 … 0 [2]	-0.5 ... +0.5 [2]
-1.6 … 0 [2]	-0.8 ... +0.8 [2]
-2.5 … 0	-1.25 ... +1.25
-4 … 0	-2 ... +2
-6 … 0	-3 ... +3
-10 … 0	-5 ... +5
-16 … 0	-8 ... +8
-25 … 0	-12.5 ... +12.5
-40 … 0	-20 ... +20
-60 ... 0	-30 ... +30

Pa	
-600 … 0 [1]	-300 ... +300 [1]
-1,000 … 0 [2]	-500 ... +500 [2]
-1,600 … 0 [2]	-800 ... +800 [2]
-2,500 … 0	-1,250 ... +1,250
-4,000 … 0	-2,000 ... +2,000
-6,000 … 0	-3,000 ... +3,000
-10,000 … 0	-5,000 ... +5,000
-16,000 … 0	-8,000 ... +8,000
-25,000 … 0	-12,500 ... +12,500
-40,000 … 0	-20,000 ... +20,000
-60,000 ... 0	-30,000 ... +30,000

1) Only available for NS 160 [6"]
2) Only available for NS 100 [4"] and NS 160 [6"]

psi	
-0.1 ... 0 [1]	-0.05 ... +0.05 [1]
-0.15 ... 0 [2]	-0.075 ... +0.075 [2]
-0.25 ... 0 [2]	-0.125 ... +0.125 [2]
-0.36 ... 0	-0.18 ... +0.18
-0.6 ... 0	-0.3 ... +0.3
-1 ... 0	-0.5 ... +0.5
-1.5 ... 0	-0.75 ... +0.75
-2.5 ... 0	-1.25 ... +1.25
-3.6 ... 0	-1.8 ... +1.8
-6 ... 0	-3 ... +3
-10 ... 0	-5 ... +5

mmH_2O	
-60 ... 0 [1]	-30 ... +30 [1]
-100 ... 0 [2]	-50 ... +50 [2]
-160 ... 0 [2]	-80 ... +80 [2]
-250 ... 0	-125 ... +125
-400 ... 0	-200 ... +200
-600 ... 0	-300 ... +300
-1,000 ... 0	-500 ... +500
-1,600 ... 0	-800 ... +800
-2,500 ... 0	-1,250 ... +1,250
-4,000 ... 0	-2,000 ... +2,000
-6,000 ... 0	-3,000 ... +3000

inH_2O	
-2.4 ... 0 [1]	-1.2 ... +1.2 [1]
-4 ... 0 [2]	-2 ... +2 [2]
-6 ... 0 [2]	-3 ... +3 [2]
-10 ... 0	-5 ... +5
-16 ... 0	-8 ... +8
-24 ... 0	-12 … +12
-40 ... 0	-20 ... +20
-60 ... 0	-30 ... +30
-100 ... 0	-50 ... +50
-160 ... 0	-80 ... +80
-240 ... 0	-120 ... +120

oz/in^2	
-1.5 … 0 [1]	-0.75 ... +0.75 [1]
-2.5 … 0 [2]	-1.25 ... +1.25 [2]
-4 … 0 [2]	-2 ... +2 [2]
-6 … 0	-3 ... +3
-10 … 0	-5 ... +5
-15 … 0	-7.5 ... +7.5
-25 … 0	-12.5 ... +12.5
-40 … 0	-20 ... +20
-60 … 0	-30 ... +30
-100 … 0	-50 ... +50
-150 … 0	-75 ... +75

1) Only available for NS 160 [6"]
2) Only available for NS 100 [4"] and NS 160 [6"]

Further details on: Scale ranges		
Unit	■ mbar ■ kg/cm^2 ■ kPa ■ Pa	■ psi ■ mmH_2O ■ inH_2O ■ oz/in^2
	Other units on request	
Overpressure safety		
Scale range < 0 ... 40 mbar [0 ... 16 inH_2O]	■ Without ■ 3 x full scale value	
Scale range ≥ 0 ... 40 mbar [0 ... 16 inH_2O]	■ Without ■ 10 x full scale value	
Vacuum safety		
Scale range < 0 ... 40 mbar [0 ... 16 inH_2O]	■ Without ■ 3 x full scale value	
Scale range ≥ 0 ... 40 mbar [0 ... 16 inH_2O]	■ Without ■ 10 x full scale value	

Further details on: Scale ranges		
Dial		
Scale layout	■ Single scale ■ Dual scale	
Scale colour	Single scale	Black
	Dual scale	Black/red
Serial number	■ Without ■ Consecutive number * ... *	
Material	Aluminium	
Special scale	Other scales or customer-specific dials, e.g. with red mark, circular arcs or circular sectors, on request	
Pointer		
Instrument pointer	Aluminium, black	
Mark pointer/drag pointer	■ Without ■ Red mark pointer on dial, fixed ■ Red mark pointer on window, adjustable (only available for NS 100 [4"] and NS 160 [6"]) ■ Red drag pointer on window, adjustable	
Pointer stop pin	■ Without ■ At zero point ■ At 6 o'clock	

Process connection	
Standard	■ EN 837-3 ■ ISO 7 ■ ANSI/B1.20.1
Size	
EN 837-3	■ G ⅛ B, male thread ■ G ¼ B, male thread ■ G ½ B, male thread ■ M20 x 1.5, male thread
ISO 7	■ R ¼, male thread ■ R ½, male thread
ANSI/B1.20.1	■ ¼ NPT, male thread ■ ½ NPT, male thread
Restrictor	■ Without ■ Ø 0.5 mm [0.02"], copper alloy ■ Ø 0.3 mm [0.012"], copper alloy
Material (wetted)	
Capsule element	Copper alloy
Sealing	NBR
Process connection	Copper alloy

Other process connections on request

Operating conditions	
Medium temperature	-20 ... +100 °C [-4 ... +212 °F] ≤ 80 °C [≤ 176 °F] with NS 160 [6"]
Ambient temperature	-20 ... +60 °C [-4 ... +140 °F]
Pressure limitation	
Steady	Full scale value
Fluctuating	0.9 x full scale value
Short time	1.3 x full scale value
Ingress protection per IEC/EN 60529	■ IP54 ■ IP55 ■ IP65 [1)]

1) Only available for NS 100 [4"] and NS 160 [6"]

Approvals

Logo	Description	Region
CE	**EU declaration of conformity**	European Union
	Pressure Equipment Directive PS > 200 bar, module A, pressure accessory	
	RoHS directive	
UKCA	**UKCA**	United Kingdom
	Pressure equipment (safety) regulations	
	Restriction of hazardous substances (RoHS) regulations	

Optional approvals

Logo	Description	Region
	PAC Kazakhstan Metrology, measurement technology	Kazakhstan
-	**MChS** Permission for commissioning	Kazakhstan
-	**PAC Ukraine** Metrology, measurement technology	Ukraine
	PAC Uzbekistan Metrology, measurement technology	Uzbekistan
-	**CPA** Metrology, measurement technology	China

Certificates (option)

Certificates	
Certificates	■ 2.2 test report per EN 10204 (e.g. state-of-the-art manufacturing, indication accuracy) ■ 3.1 inspection certificate per EN 10204 (e.g. material proof for wetted metal parts, indication accuracy)
Calibration	■ Factory calibration certificate ■ SCS calibration certificate (traceable and accredited in accordance with ISO/IEC 17025) ■ Calibration certificate by a national accreditation body, traceable and accredited in accordance with ISO/IEC 17025 on request
Recommended calibration interval	1 year (dependent on conditions of use)

→ For approvals and certificates, see website

Dimensions in mm [in]

Lower mount (radial)

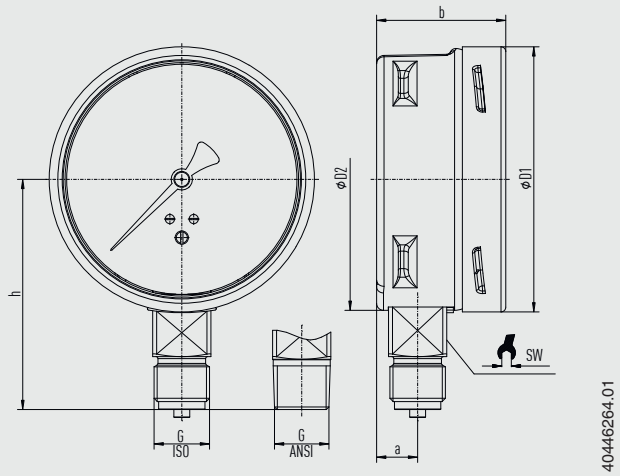

NS	Weight
63 [2½"]	approx. 0.2 kg [0.44 lb]
100 [4"]	approx. 0.6 kg [1.32 lb]
160 [6"]	approx. 1.0 kg [2.2 lb]

Process connection with thread per EN 837-3

NS	G	Dimensions in mm [in]					
		h ±1 [0.04]	a	b	D1	D2	SW
63 [2 ½"]	G ⅛ B	49 [1.93]	9.5 [0.37]	43 [1.69]	63 [2.48]	62 [2.44]	14 [0.55]
	G ¼ B	52 [2.05]	9.5 [0.37]	43 [1.69]	63 [2.48]	62 [2.44]	14 [0.55]
100 [4"]	G ¼ B	80 [3.15]	15.5 [0.61]	49.5 [1.95]	101 [3.98]	99 [3.9]	22 [0.87]
	G ½ B	87 [3.43]	15.5 [0.61]	49.5 [1.95]	101 [3.98]	99 [3.9]	22 [0.87]
	M20 x 1.5	87 [3.43]	15.5 [0.61]	49.5 [1.95]	101 [3.98]	99 [3.9]	22 [0.87]
160 [6"]	G ¼ B	111 [4.37]	15.5 [0.61]	49.5 [1.95]	161 [6.34]	159 [6.26]	22 [0.87]
	G ½ B	118 [4.65]	15.5 [0.61]	49.5 [1.95]	161 [6.34]	159 [6.26]	22 [0.87]
	M20 x 1.5	118 [4.65]	15.5 [0.61]	49.5 [1.95]	161 [6.34]	159 [6.26]	22 [0.87]

Process connection with thread per ISO 7

NS	G	Dimensions in mm [in]					
		h ±1 [0.04]	a	b	D1	D2	SW
63 [2 ½"]	R ⅛	49 [1.93]	9.5 [0.37]	43 [1.69]	63 [2.48]	62 [2.44]	14 [0.55]
	R ¼	52 [2.05]	9.5 [0.37]	43 [1.69]	63 [2.48]	62 [2.44]	14 [0.55]
100 [4"]	R ¼	80 [3.15]	15.5 [0.61]	49.5 [1.95]	101 [3.98]	99 [3.90]	22 [0.87]
	R ½	86 [3.39]	15.5 [0.61]	49.5 [1.95]	101 [3.98]	99 [3.90]	22 [0.87]
160 [6"]	R ¼	111 [4.37]	15.5 [0.61]	49.5 [1.95]	161 [6.34]	159 [6.26]	22 [0.87]
	R ½	117 [4.60]	15.5 [0.61]	49.5 [1.95]	161 [6.34]	159 [6.26]	22 [0.87]

Process connection with thread per ANSI/B1.20.1

NS	G	Dimensions in mm [in]					
		h ±1 [0.04]	a	b	D1	D2	SW
63 [2 ½"]	⅛ NPT	49 [1.93]	9.5 [0.37]	43 [1.69]	63 [2.48]	62 [2.44]	14 [0.55]
	¼ NPT	52 [2.05]	9.5 [0.37]	43 [1.69]	63 [2.48]	62 [2.44]	14 [0.55]
100 [4"]	¼ NPT	80 [3.15]	15.5 [0.61]	49.5 [1.95]	101 [3.98]	99 [3.90]	22 [0.87]
	½ NPT	86 [3.39]	15.5 [0.61]	49.5 [1.95]	101 [3.98]	99 [3.90]	22 [0.87]
160 [6"]	¼ NPT	111 [4.37]	15.5 [0.61]	49.5 [1.95]	161 [6.34]	159 [6.26]	22 [0.87]
	½ NPT	117 [4.60]	15.5 [0.61]	49.5 [1.95]	161 [6.34]	159 [6.26]	22 [0.87]

NS 63 [2 ½"], centre back mount

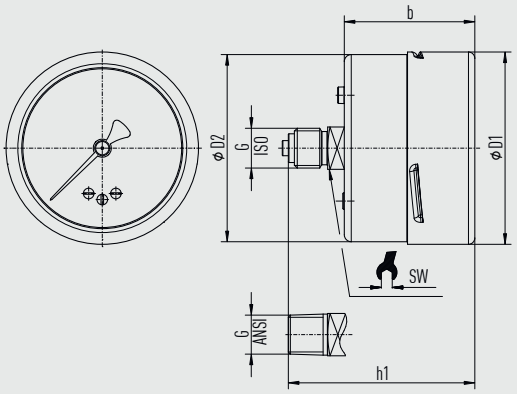

40446266.01

NS	Weight
63 [2½"]	approx. 0.2 kg [0.44 lb]

Process connection with thread per EN 837-3

NS	G	Dimensions in mm [in]				
		h1 ±1 [0.04]	b	D1	D2	SW
63 [2 ½"]	G ⅛ B	59 [2.32]	43 [1.69]	63 [2.48]	62 [2.44]	14 [0.55]
	G ¼ B	62 [2.44]	43 [1.69]	63 [2.48]	62 [2.44]	14 [0.55]

Process connection with thread per ISO 7 or ANSI/B1.20.1

NS	G	Dimensions in mm [in]				
		h1 ±1 [0.04]	b	D1	D2	SW
63 [2 ½"]	R ¼	62 [2.44]	43 [1.69]	63 [2.48]	62 [2.44]	14 [0.55]

Process connection with thread per ISO 7 or ANSI/B1.20.1

NS	G	Dimensions in mm [in]				
		h1 ±1 [0.04]	b	D1	D2	SW
63 [2 ½"]	⅛ NPT	59 [2.32]	43 [1.69]	63 [2.48]	62 [2.44]	14 [0.55]
	¼ NPT	62 [2.44]	43 [1.69]	63 [2.48]	62 [2.44]	14 [0.55]

NS 100 [4"] and NS 160 [6"], lower back mount

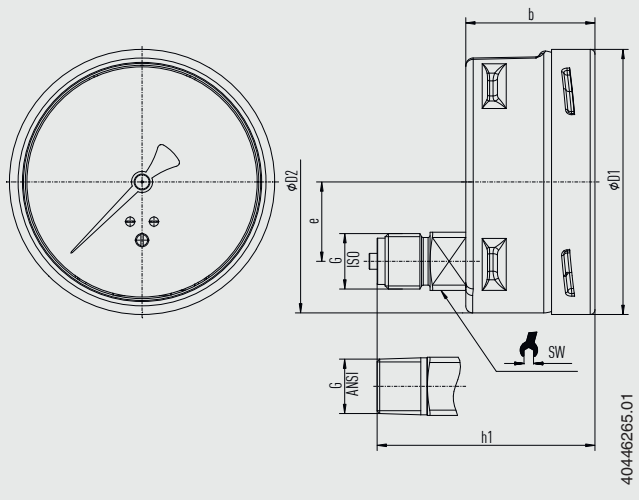

NS	Weight
100 [4"]	approx. 0.55 kg [1.21 lb]
160 [6"]	approx. 1 kg [2.2 lb]

Process connection with thread per EN 837-3

NS	G	Dimensions in mm [in]					
		h1 ±1 [0.04]	b	D1	D2	e	SW
100 [4"]	G ¼ B	76 [2.99]	49.5 [1.95]	101 [3.98]	99 [3.90]	30 [1.181]	22 [0.87]
	G ½ B	83 [3.27]	49.5 [1.95]	101 [3.98]	99 [3.90]	30 [1.181]	22 [0.87]
	M20 x 1.5	83 [3.27]	49.5 [1.95]	101 [3.98]	99 [3.90]	30 [1.181]	22 [0.87]
160 [6"]	G ¼ B	76 [2.99]	49.5 [1.95]	161 [6.34]	159 [6.26]	50 [1.97]	22 [0.87]
	G ½ B	83 [3.27]	49.5 [1.95]	161 [6.34]	159 [6.26]	50 [1.97]	22 [0.87]
	M20 x 1.5	83 [3.27]	49.5 [1.95]	161 [6.34]	159 [6.26]	50 [1.97]	22 [0.87]

Process connection with thread per ISO 7

NS	G	Dimensions in mm [in]					
		h1 ±1 [0.04]	b	D1	D2	e	SW
100 [4"]	R ¼	76 [2.99]	49.5 [1.95]	101 [3.98]	99 [3.90]	30 [1.181]	22 [0.87]
	R ½	82 [3.23]	49.5 [1.95]	101 [3.98]	99 [3.90]	30 [1.181]	22 [0.87]
160 [6"]	R ½	82 [3.23]	49.5 [1.95]	161 [6.34]	159 [6.26]	50 [1.97]	22 [0.87]

Process connection with thread per ANSI/B1.20.1

NS	G	Dimensions in mm [in]					
		h1 ±1 [0.04]	b	D1	D2	e	SW
100 [4"]	¼ NPT	76 [2.99]	49.5 [1.95]	101 [3.98]	99 [3.90]	30 [1.181]	22 [0.87]
	½ NPT	82 [3.23]	49.5 [1.95]	101 [3.98]	99 [3.90]	30 [1.181]	22 [0.87]
160 [6"]	¼ NPT	76 [2.99]	49.5 [1.95]	161 [6.34]	159 [6.26]	50 [1.97]	22 [0.87]
	½ NPT	82 [3.23]	49.5 [1.95]	161 [6.34]	159 [6.26]	50 [1.97]	22 [0.87]

Ordering information

Model / Nominal size / Scale range / Connection location / Process connection / Options

© 12/2008 WIKA Alexander Wiegand SE & Co. KG, all rights reserved.
The specifications given in this document represent the state of engineering at the time of publishing.
We reserve the right to make modifications to the specifications and materials.
In case of a different interpretation of the translated and the English data sheet, the English wording shall prevail.

WIKA Alexander Wiegand SE & Co. KG
Alexander-Wiegand-Straße 30
63911 Klingenberg/Germany
Tel. +49 9372 132-0
info@wika.de
www.wika.de