Battery Series (1553D)

Top View of Assembly

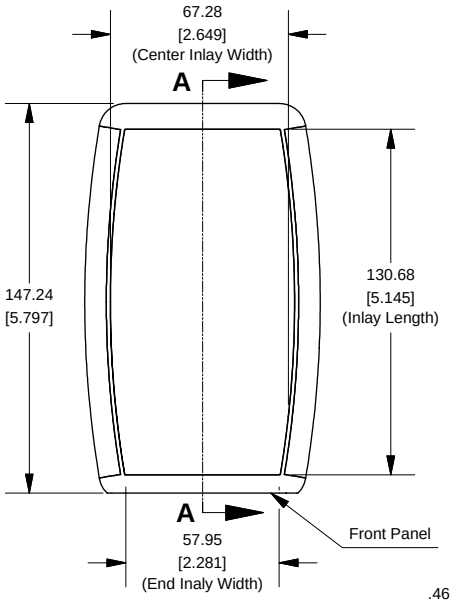

SECTION A-A
(Side View Inside Assembly)

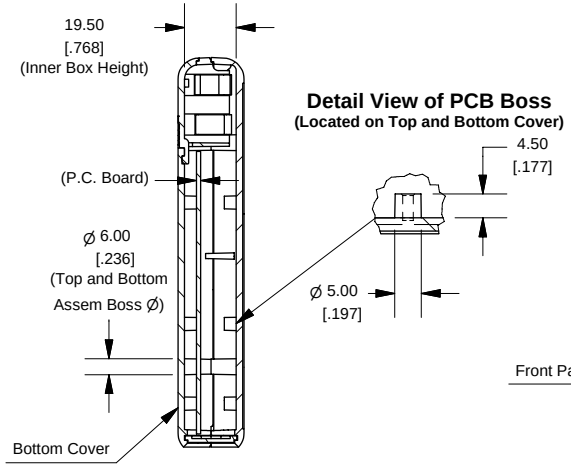

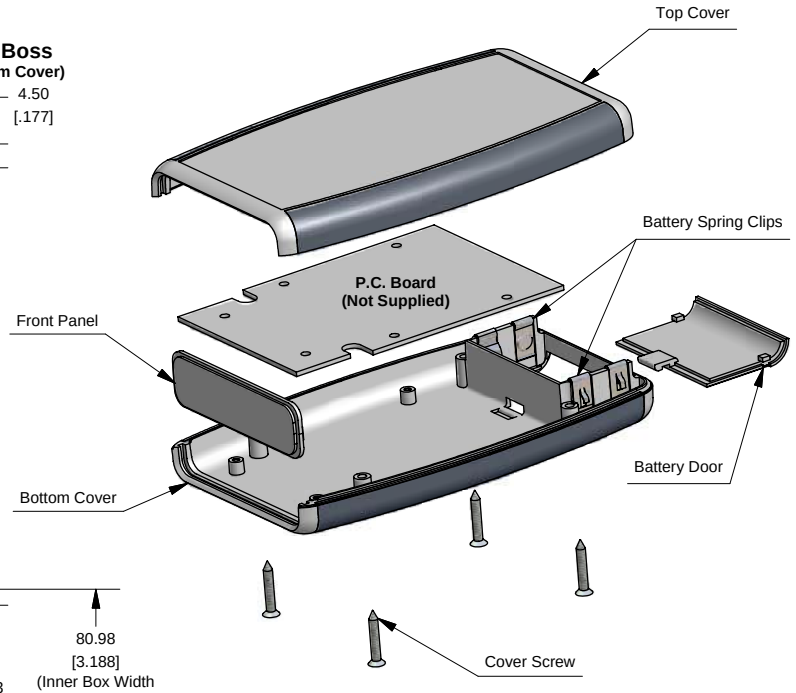

End View of Assembly

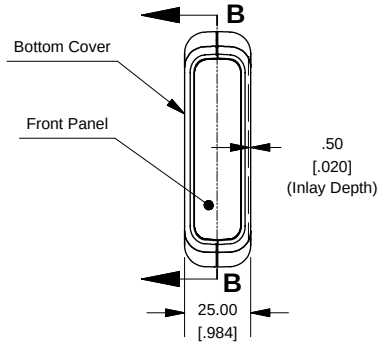

SECTION B-B
(Inside of Bottom Cover)

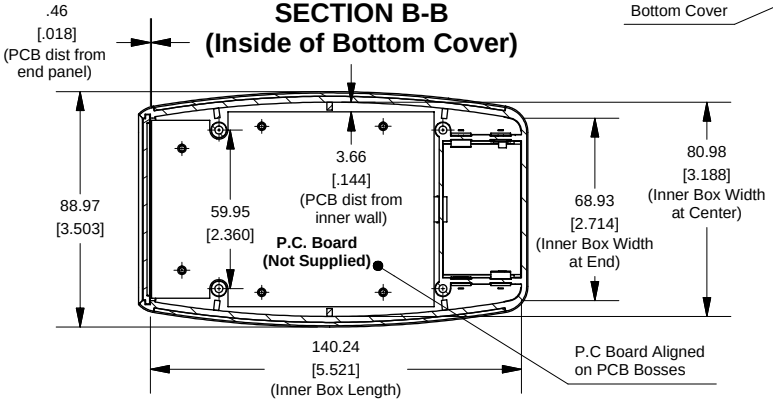

Front/Rear Panel
(Dashed Line Indicates Viewing Area)

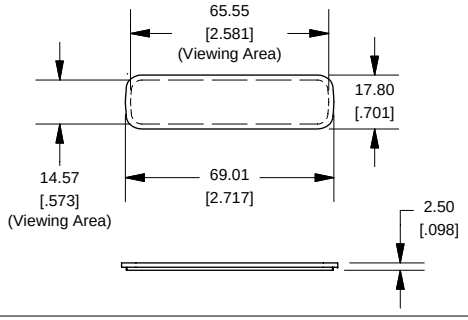

Maximum P.C. Board Size

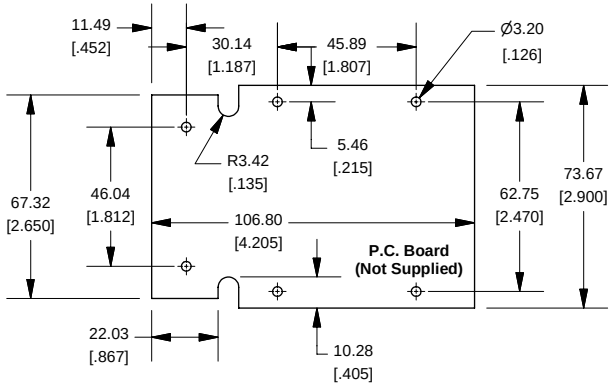

NOTE

Purchased assembly includes top and bottom cover, front plastic panel, battery door, battery spring clips, 9V adapter and 4 cover screws.

HAMMOND MANUFACTURING™

www.hammondmfg.com