PTS636 Series

6.0 x 3.5 mm Top Actuated



Description

The PTS636 series is a small 6.0 x 3.5 form factor in SMT version with 3 different heights and 4 available actuation forces, ideal for general usage applications. It also included ground pin options on 2.5 mm height version.

Features & Benefits

- 6.0 x 3.5 mm footprint
- Multiple heights
- THT or SMT type

Applications

- IoT devices
- Home automation
- Remote controls

Specifications

Function	Momentary action
Contact Arrangement	1 make contact = SPST, N.O.
Terminals	THT, J, G and F type for SMT
Packaging	In bags of 1,000 pcs for THT In reels of 3,000 pieces for 2.5 mm In reels of 1.500 pieces for 4.3 and 5.0 mm Dimensions of reels according to EIA 481B External diameter 330 mm

Electrical Characteristics

Max. Voltage	12 VDC
Max. Current DC	50 mA
Dielectric Strength	250 VA C (1mn)
Contact Resistance	≤ 100 mΩ
Insulation Resistance	≥ 100 M Ω
Bounce Time	≤ 10 ms
Travel	0.25 ± 0.1 mm

Environmental Characteristics

Operating Temperature	-40˚C to 90˚C

Process

Soldering	This component is suited to the following methods: Infrared Reflow Soldering in accordance with IEC61760-1

Notes:
Specifications listed above are for switches with standard options. For information on specific and custom switches, consult Customer Service Center.
The PTS series is not certified for using in Automotive application and no PPAP. However, in the case of some automotive accessories and specific applications for 2 and 3 wheeled vehicles the PTS is widely used and very suitable. Please contact your local C&K representative to discuss your application and the best switch solution.

Life Cycles

Height (mm)	Force	Operating Life
2.5mm	180gf ± 30gf	70,000
	250gf ± 50gf	100,000
4.3mm & 5.0 mm	130gf ± 50gf	50,000
	180gf ± 50gf	50,000
	250gf ± 50gf	30,000
	320gf ± 50gf	20,000

© 2025 Littelfuse, Inc.
Specifications are subject to change without notice.
Revised: VL 03/14/25

PTS636 Series
6.0 x 3.5 mm Top Actuated

Dimensions

SMT G leads (4.3 & 5.0 mm height)

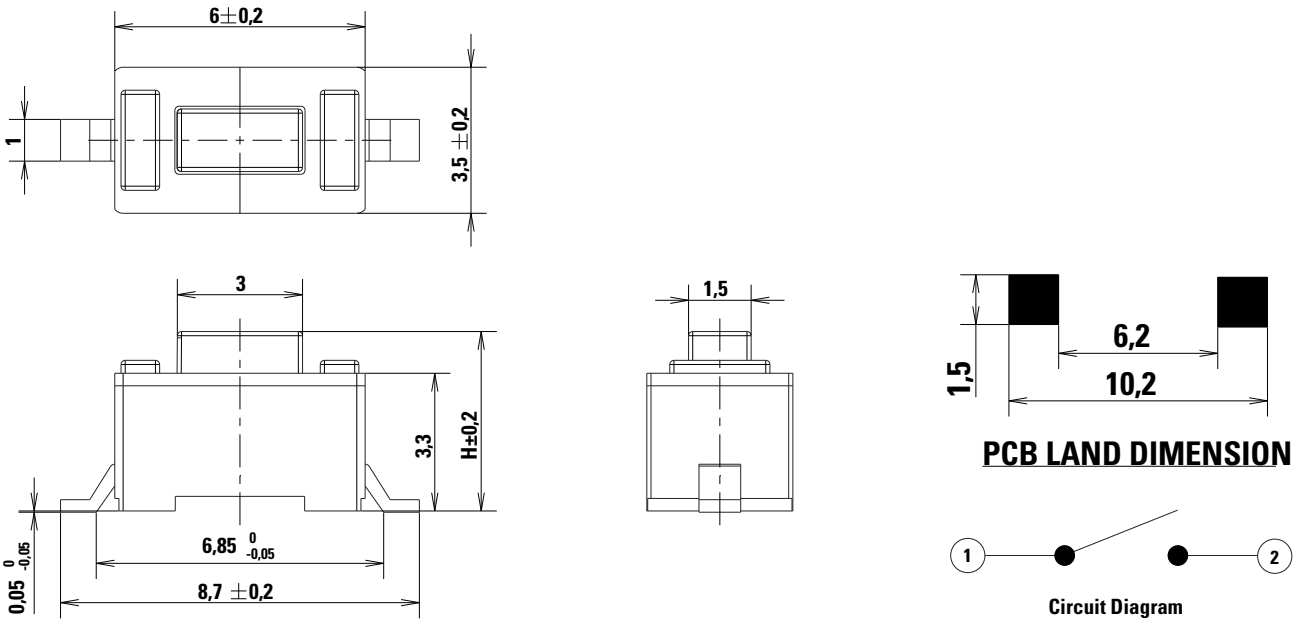

THT versions (4.3 & 5.0 mm height)

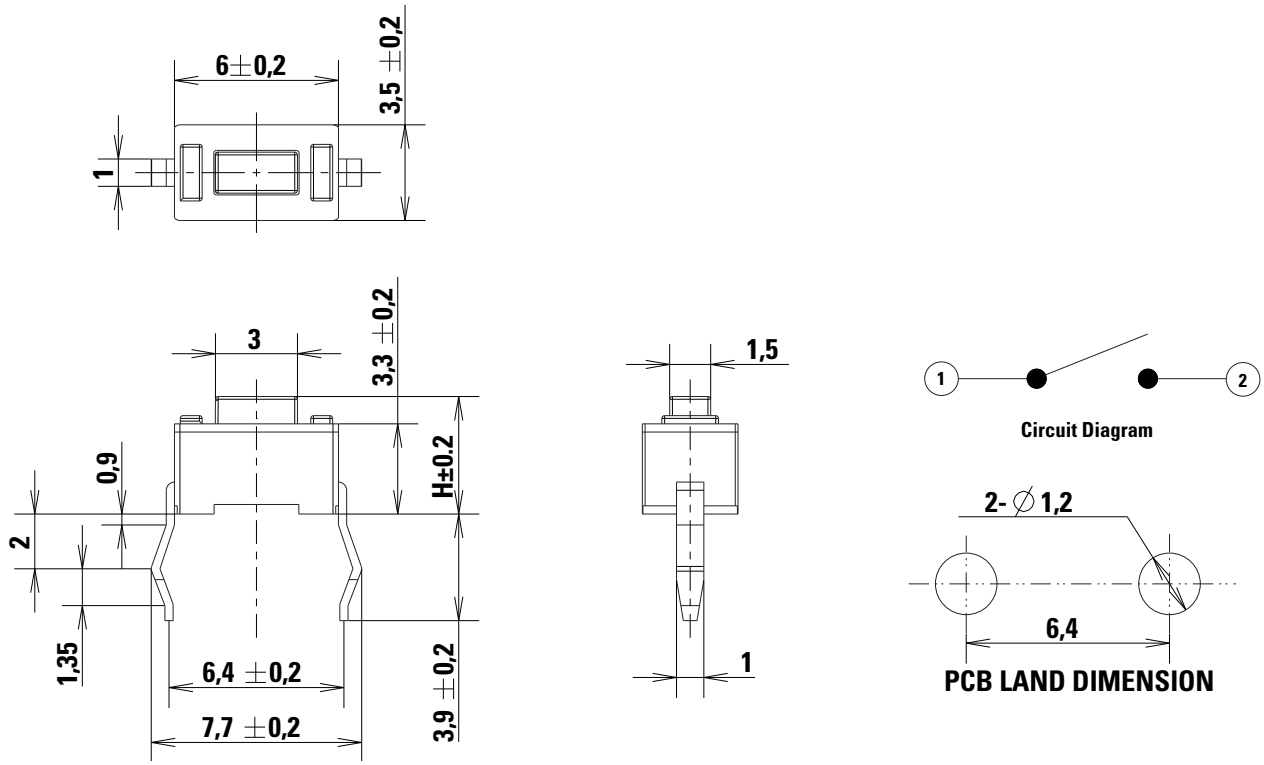

© 2025 Littelfuse, Inc.
Specifications are subject to change without notice.
Revised: VL 03/14/25

PTS636 Series
6.0 x 3.5 mm Top Actuated

SMT J leads (4.3 & 5.0 mm height)

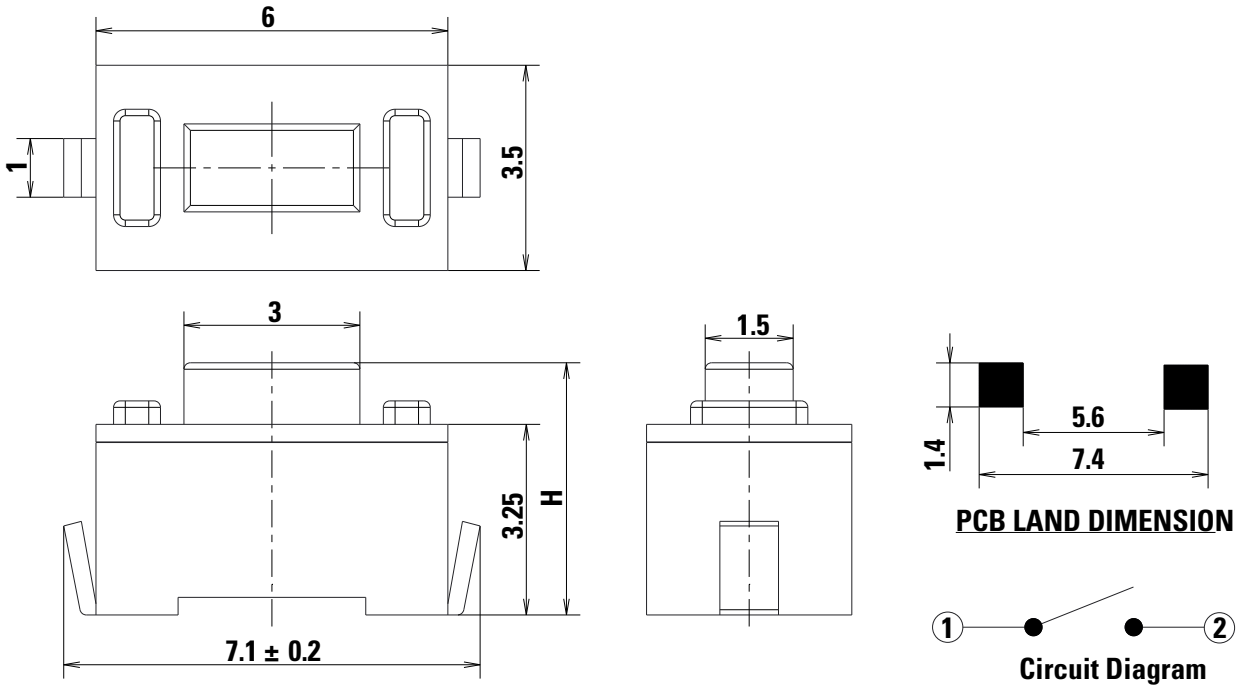

SMT G leads (2.5 mm height)

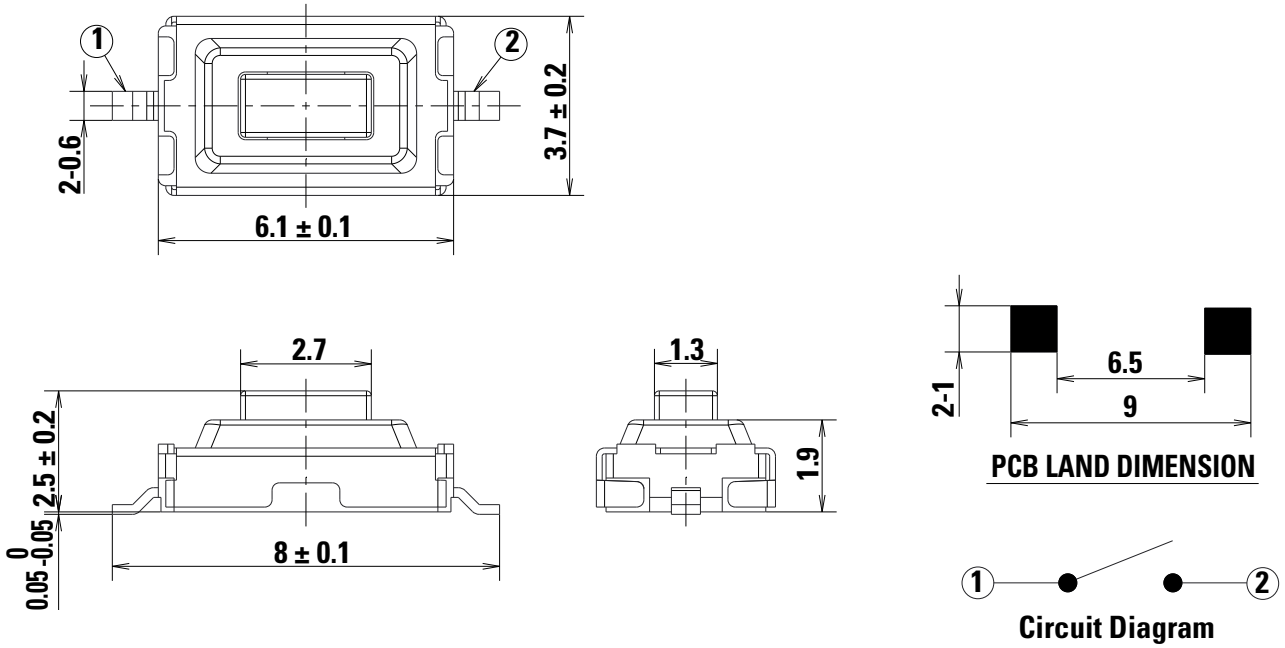

© 2025 Littelfuse, Inc.
Specifications are subject to change without notice.
Revised: VL 03/14/25

PTS636 Series
6.0 x 3.5 mm Top Actuated

SMT J leads (2.5 mm height)

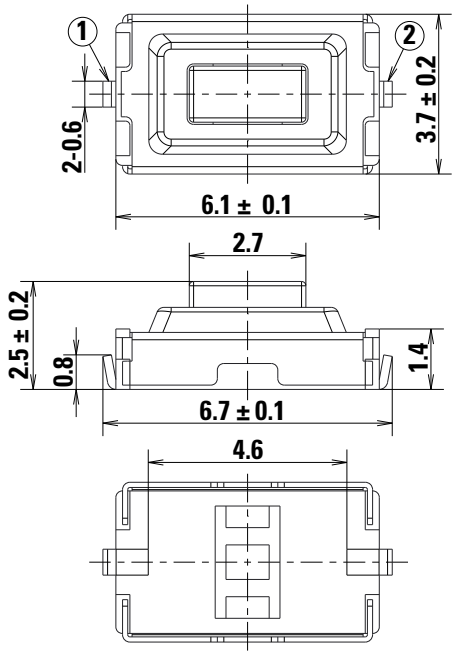

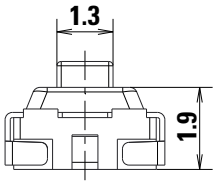

PCB LAYOUT

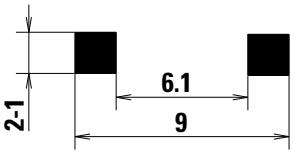

PCB LAND DIMENSION



Circuit Diagram

SMT F leads (2.5 mm height)

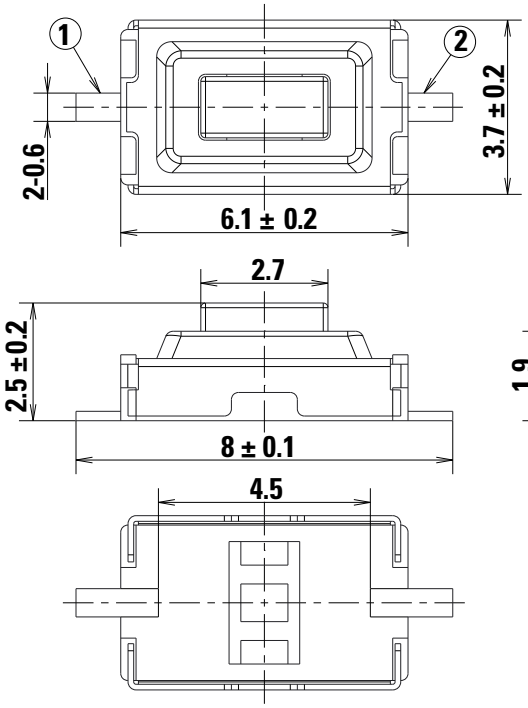

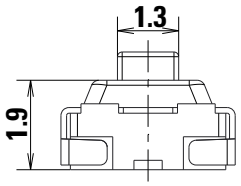

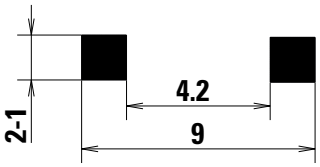

PCB LAND DIMENSION



Circuit Diagram

© 2025 Littelfuse, Inc.
Specifications are subject to change without notice.
Revised: VL 03/14/25

PTS636 Series
6.0 x 3.5 mm Top Actuated

SMT G leads, with ground pin (2.5 mm height)

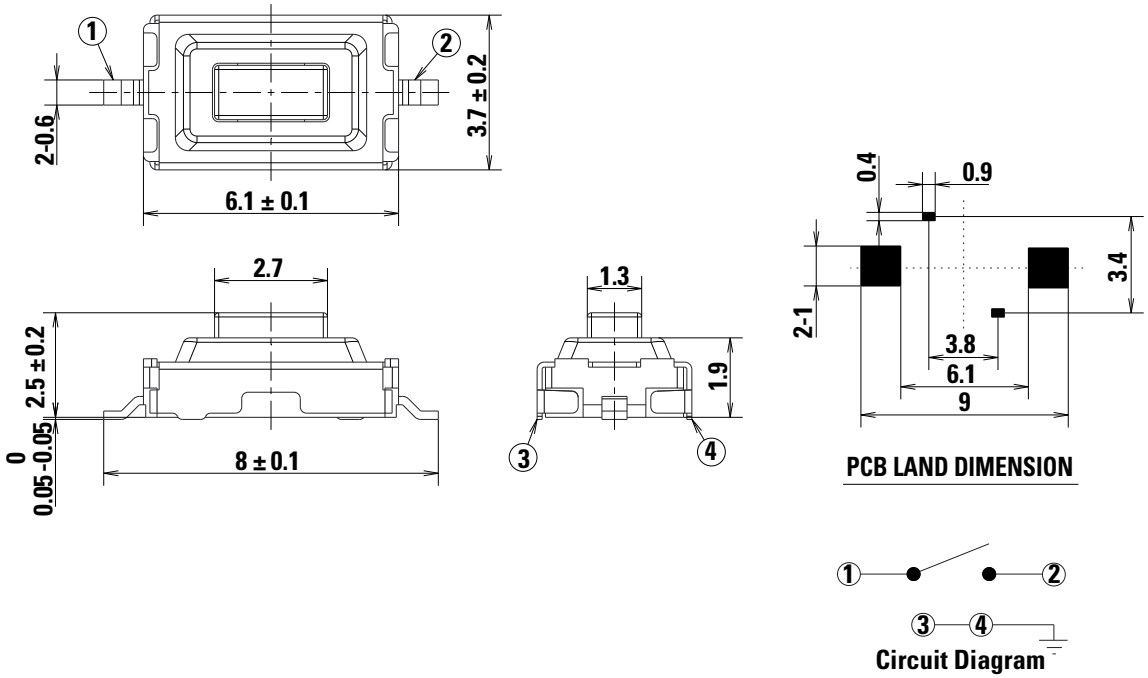

SMT J leads, with ground pin (2.5 mm height)

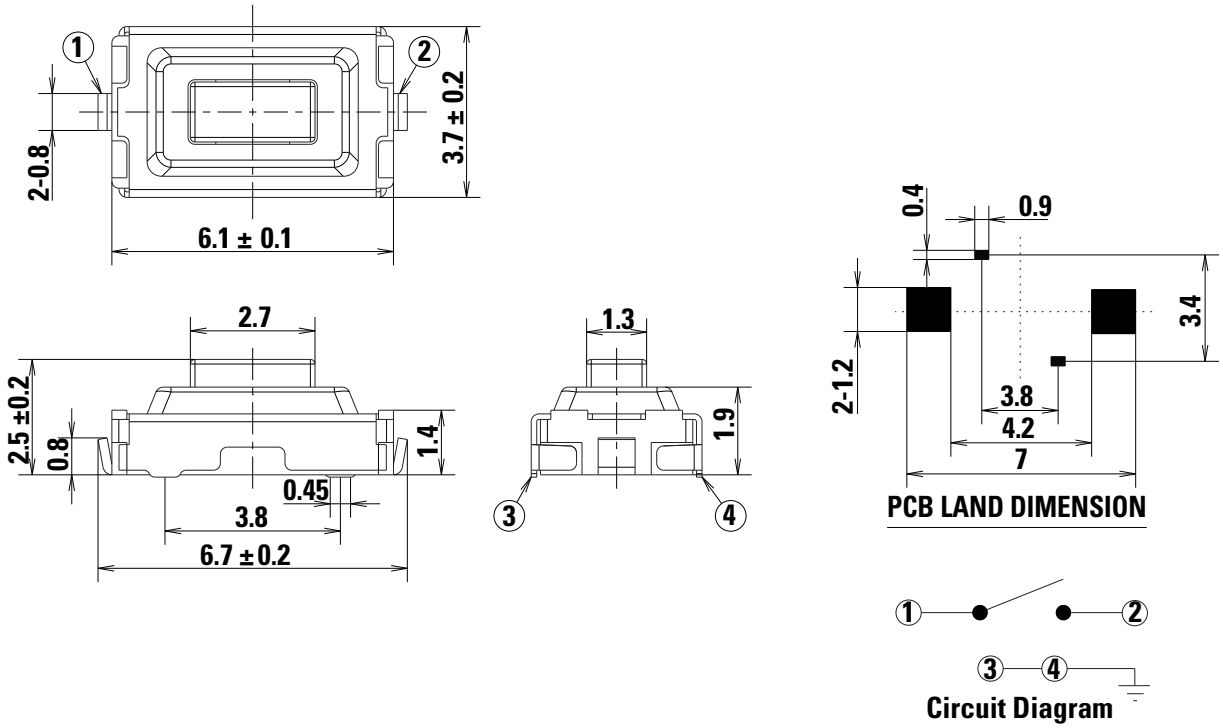

© 2025 Littelfuse, Inc.
Specifications are subject to change without notice.
Revised: VL 03/14/25

Packaging

4.3 and 5.0 mm height - G leads

The Dimension of Carrier Tape & Reel
Packaging Quantity : 1500 pcs / reel

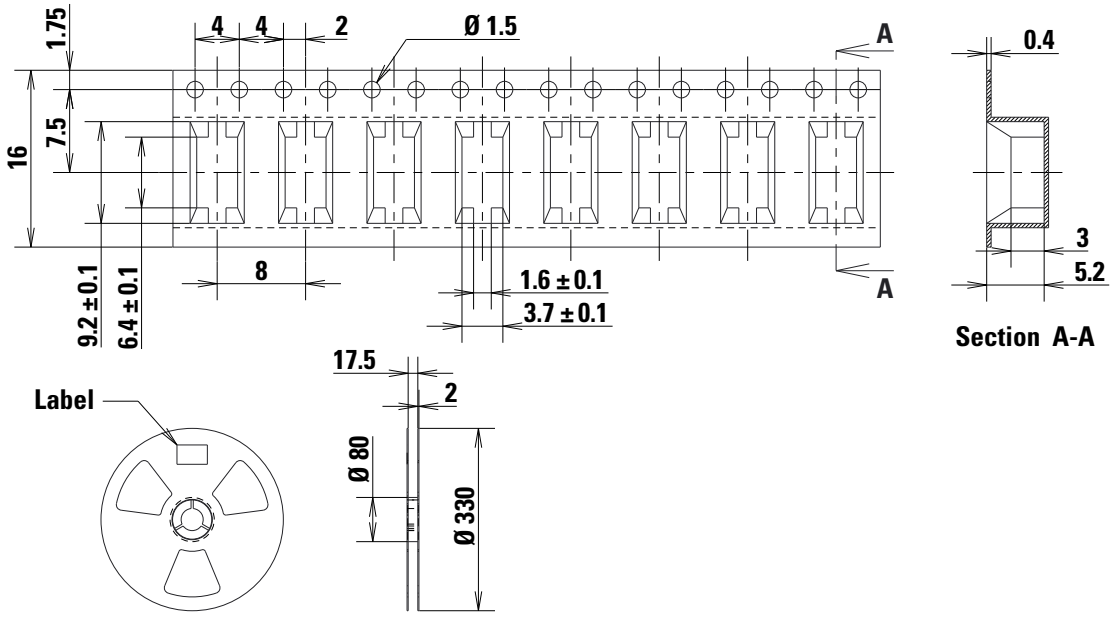

4.3 and 5.0 mm height - J leads

The Dimension of Carrier Tape & Reel
Packaging Quantity: 1500 pcs / reel

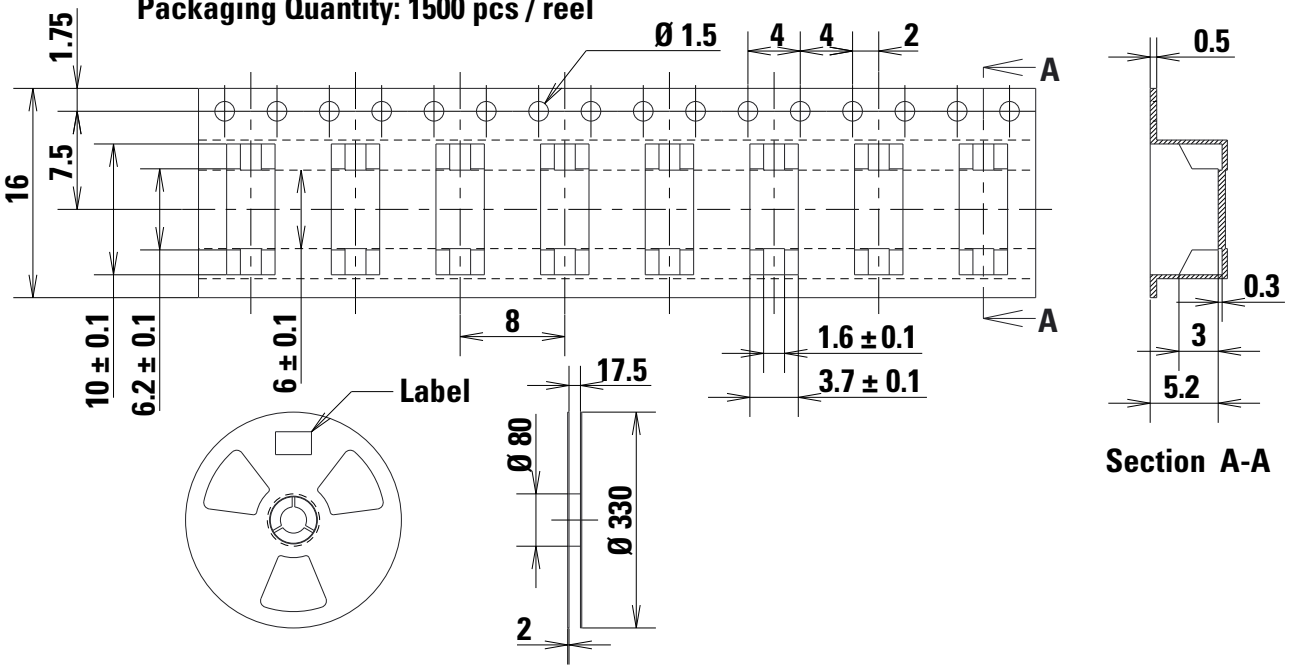

© 2025 Littelfuse, Inc.
Specifications are subject to change without notice.

PTS636 Series
6.0 x 3.5 mm Top Actuated

2.5 mm height

The Dimension of Carrier Tape & Reel
Packaging Quantity : 3000 pcs / reel

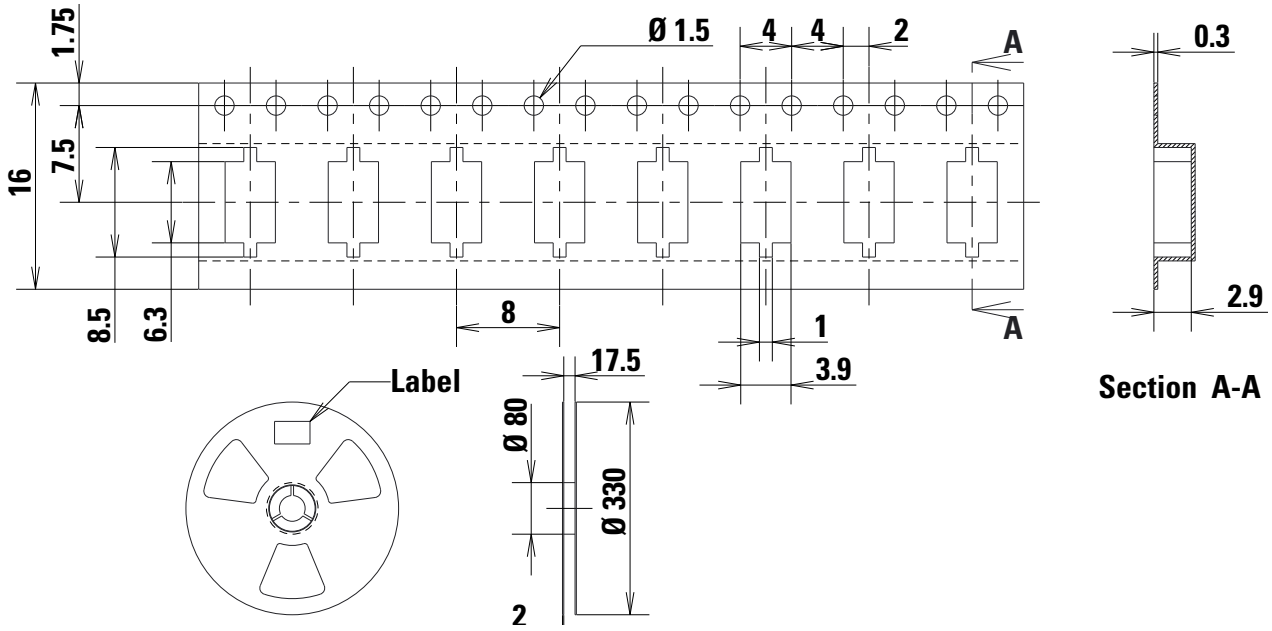

Ordering Number

Our easy build-a-switch concept allows you to mix and match options to create the switch you need. To order, select desired option from each category and and place it in the appropriate box.

PTS636 - S - x - x - xx - x - xxxx - LFS

Termination
S: Straight

Actuation Force
L: 130 gf
M: 180 gf
K: 250 gf
P: 320 gf

Ground Pin
None: Without ground pin
G: With ground pin

Height
43: 4.3mm thru-hole & SMT
50: 5.0mm thru-hole & SMT
25: 2.5mm SMT only

Terminal Shape
None: Gullwing
J: J lead
F: Flat lead
2.5mm without ground pin version only

Insertion Type
NONE: Thru-hole
SMTR: Surface mount, T&R

RoHS compliant,
Silver plated

Disclaimer Notice - Information furnished is believed to be accurate and reliable. However, users should independently evaluate the suitability of and test each product selected for their own applications. Littelfuse products are not designed for, and may not be used in, all applications. Read complete Disclaimer Notice at http://www.littelfuse.com/disclaimer-electronics.

© 2025 Littelfuse, Inc.
Specifications are subject to change without notice.
Revised: VL 03/14/25