(V)PRK 95 Retro-reflective photoelectric sensors with polarisation filter



0.15 ... 9m
1.0 ... 12m

10 - 30 V DC

- Polarised retro-reflective photoelectric sensor using visible red light
- High switching frequency for detection of fast events
- Small construction with glass cover and robust zinc diecast housing, protection class IP 67/IP 69K for industrial application
- Polarisation filter blocks unwanted reflections
- Complementary switching outputs for light/ dark switching or as a control function

Dimensioned drawing

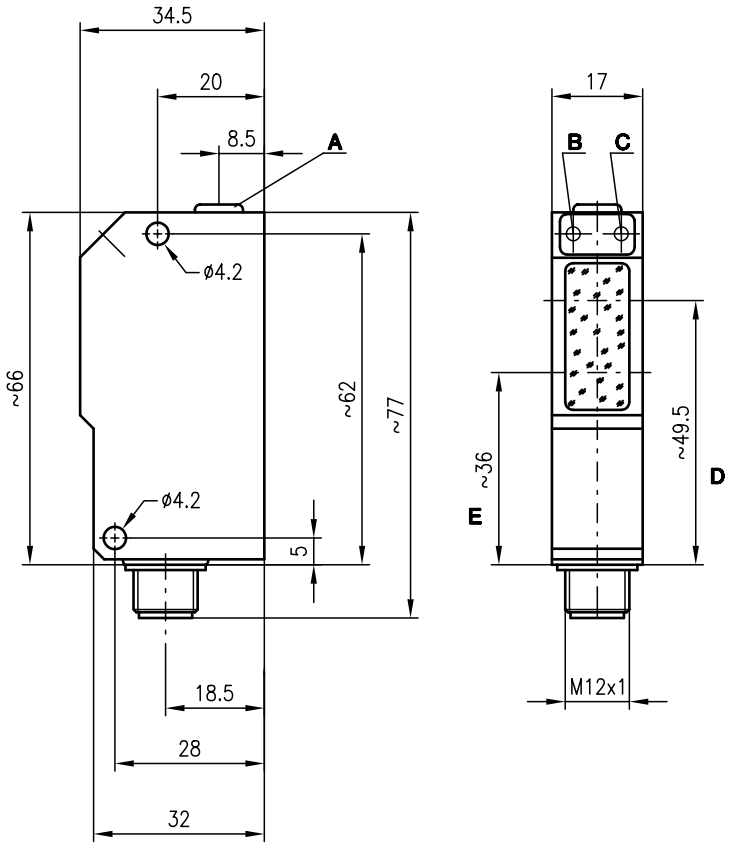

A sensitivity adjustment (for IPRK 95/44 L.5)
B Switching indicator yellow
C Operation indicator green
D Optical axis receiver
E Optical axis transmitter

Electrical connection

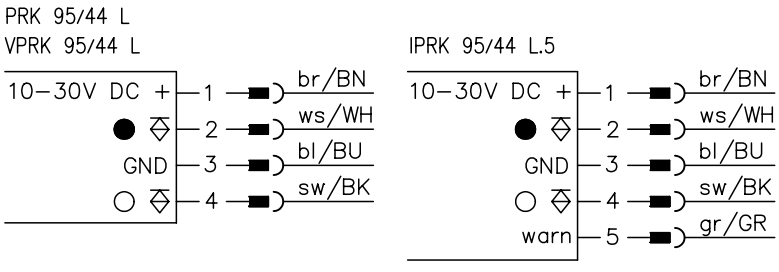

IEC 60947...
IEC 60947...
IP 69K
IP 67

Accessories:

(available separately)

- Mounting systems (BT 95, UMS 1)
- M12 connectors (KD ...)
- Reflectors
- Reflective tapes

We reserve the right to make changes • 95_b07e.fm

Specifications

Optical data	(I)PRK 95…	VPRK 95…
Typ. operating range limit (TK(S) 100x100) [1]	0.15 … 9m	1.0 … 12m
Operating range [2]	see tables	see tables
Light beam characteristic	divergent	
Light source	LED (modulated light)	
Wavelength	660nm (visible red light, polarised)	
Timing		
Switching frequency	1000Hz	
Response time	0.5ms	
Delay before start-up	≤ 100ms	
Electrical data		
Operating voltage U_B	10 … 30VDC (incl. residual ripple)	
Residual ripple	≤ 15% of U_B	
Bias current	≤ 35mA	
Switching output	2 PNP transistor outputs, complementary	
Function characteristics	light/dark switching	
Signal voltage high/low	≥ (U_B-2V)/≤ 2V	
Output current	max. 100mA	
Sensitivity	adjustable with multiturn potentiometer	
Indicators		
LED green	ready	
LED yellow	light path free	
LED yellow flashing	light path free, no performance reserve	
Mechanical data		
Housing	diecast zinc	
Optics cover	glass	
Weight	90g	
Connection type	M12 connector, stainless steel	
Environmental data		
Ambient temp. (operation/storage)[3]	-25°C (-30°C) … +55°C/-40°C … +55°C	
Protective circuit [4]	2, 3	
VDE safety class [5]	II, all-insulated	
Protection class	IP 67, IP 69K [6]	
LED class	1 (acc. to EN 60825-1)	
Standards applied	IEC 60947-5-2	
Warning output autoControl warn	PNP transistor, counting principle	
Signal voltage high/low	≥ (U_B-2V)/≤ 2V	
Output current	max. 100mA	

1) Operating range limit: max. attainable range without performance reserve
2) Operating range: recommended range with performance reserve
3) -30°C with operating voltage continuously applied
4) 2=polarity reversal protection, 3=short-circuit protection for all outputs
5) Rating voltage 250VAC
6) IP 69K test acc. to DIN 40050 part 9 simulated, high pressure cleaning conditions without the use of additives, acids and bases are not part of the test

Order guide

	Designation	Part No.
With polarisation filter	PRK 95/44 L	500 34511
With polarisation filter and long range	VPRK 95/44 L	500 34608
With polarisation filter, sensitivity adjustment and warning output	IPRK 95/44 L.5	500 34512

Tables

(I)PRK 95…

Reflectors			Operating range
1	TK(S)	100x100	0.2 … 6.0m
2	MTK(S)	50x50	0.2 … 4.2m
3	TK(S)	30x50	0.2 … 2.5m
4	TK(S)	20x40	0.2 … 1.9m
5	Tape 2	100x100	0.2 … 2.4m

1	0.2	6	9
2	0.2	4.2	7.1
3	0.2	2.5	4.1
4	0.2	1.9	3.2
5	0.2	2.4	4.0

Operating range [m]
Typ. operating range limit [m]

VPRK 95…

Reflectors		Operating range
TK(S)	100x100	1.0 … 10.0m
TK(S)	50x50	1.0 … 6.0m
TK(S)	20x40	1.0 … 4.0m
Tape 2	100x100	1.0 … 4.0m

TK … = adhesive
TKS … = screw type
Tape 2 = adhesive

Diagrams

(I)PRK 95…

Typ. response behaviour (TK 100x100)

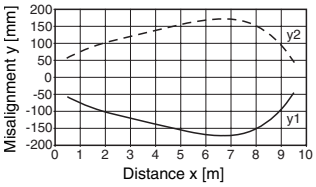

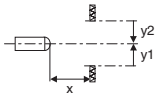

Remarks