Pulse counters, electromechanical

Standard counters | **6 or 8 digits with/without reset (AC+DC)** | **B16 / B18**



The standard totalizers B16 (with manual reset) and B16, B18 (without reset) offer a robust construction.

They are ideal for use in harsh industrial environments as individual counters or as plug-in types in combination with additional B, BVa, HB or HVa counters.

Characteristics

- B16.x1: 6-digit totalizer with manual reset.
- B16.x0 and B18.x0: 6- and 8-digit totalizers without reset.
- Counters without front bezel fit into bezels F1B and F2B and can be combined in RM 50 x 25 mm with socket 945.2.
- Very long service life (200 million pulses).

Benefits

- Can be combinded with preset counters BVa and HVa, as well as with timer HB.
- Can be upgraded using various front covers to protect against dust, dirt and humidity – reset can be locked out.

Applications

General quantity counting, piece counting, event counting, timing.

Type series

Description	*6 digits without reset*	*8 digits without reset*	*6 digits with reset*
Counter without front bezel, rear mounting, plugs into socket box 945.2 and frontbezel F1	–	**B18.00**	**B16.01**
Panel mount, front bezel size no. 1 with 2 mounting holes	**B16.10**	**B18.10**	**B16.11**
Panel mount, for clip mounting	**B16.20**	**B18.20**	**B16.21**
Panel mount, front bezel size no. 3 with 2 mounting holes	**B16.30**	**B18.30**	**B16.31**

Order information
- Art. no.
- For special voltages, please give type, voltage, kind of voltage and series e.g.: B16.31, 4.5 V DC, 0 or B18.00, 48 V AC, a

© Fritz Kübler GmbH, subject to errors and changes. 03/2023

Standard counters | 6 or 8 digits with/without reset (AC+DC) | B16 / B18

Accessories / Mounting examples

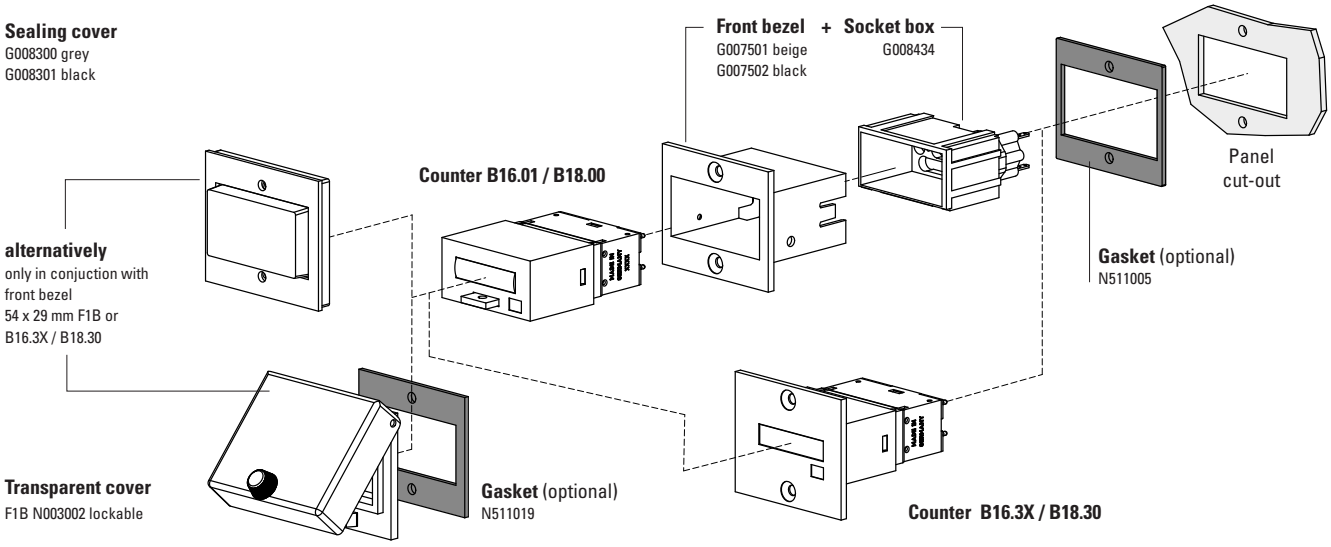

		Type / size	Description		Order no.	suitable gasket
Front bezel		**F1B**	for 1x counter B16.01 or B18.00 for cut-out 54 x 29 mm [2.13 x 1.14"] (only in conjuction with socket box G008434)	beige black	**G007501** **G007502**	**N511005**
		F2B	for 2x counter B16.01 or B18.00 for cut-out 54 x 54 mm [2.13 x 2.13"] (only in conjuction with 2 x socket box G008434)	beige black	**G007503** **G007504**	**N511003**
Socket box		**945.2**	for plug-in connection in front bezel F1B	black	**G008434**	–
Sealing cover IP65		**K1**	for counter B1x.3x or B1x.0x in conjuction with front bezel F1B	transp. /grey transp. /black	**G008300** **G008301**	–
		K2	only in conjuction with front bezel F2B (for 2x counter B16.01 / B18.00)	transp. /grey transp. /black	**G008302** **G008303**	
Transparent cover IP65		**1 Dv**	cover lockable for counter B1x.3x or for counter B1x.0x in conjuction with front bezel F1B	transp. /black	**N003002**	**N511019**
		2 Dv	cover lockable only in conjuction with front bezel F2B	transp. /black	**G008143**	
		2 Dvs	cover key lockable only in conjuction with front bezel F2B	transp. /black	**G008153**	
Gasket counter			56 x 40 mm [2.20 x 1.57"] 53 x 28 mm [2.09 x 1.10"] 60 x 50 mm [2.36 x 1.97"]	B16.1 / B18.1 B16.2 / B18.2 B16.3 / B18.3	**N511045** **N511015** **N511019**	
Mounting frame		**cut-out 50 x 25 mm [1.97 x 0.98"]**	via adapter T008180 for snap-on mounting on 35 mm [1.38"] top-hat DIN rail	chromated	**G300004**	–
Enclosure blind		**48 x 24 mm [1.89 x 0.94"]**	for cut-out 50 x 25 mm [1.97 x 0.98"], for counter 53 x 28 mm [2.09 x 1.10"]	black	**T005753**	–
DIN rail mount		**SR 1**	for snap-on mounting on 35 mm [1.38"] top-hat DIN rail		**G300000**	
		SR 2	for 2x B16 / B18		**G300001**	

© Fritz Kübler GmbH, subject to errors and changes. 03/2023

Pulse counters, electromechanical

Standard counters | 6 or 8 digits with/without reset (AC+DC) | B16 / B18

Technical data

Electrical connection	count mechanism	pin ø 1.6 mm [0.063] with push on connector for flying leads 0.5 ... 1.0 mm²
	socket box	flat pin 0.8 x 2.8 mm [0.032 x 0.11"]
Rated voltage	type 0 / 1 / a	12 / 24 / 48 / 115 / 230 V DC ±10 % 24 / 48 / 115 / 230 V AC ±10 %
Color of counter		grey
Height of figures	B16	2 x 4.5 mm [0.079 x 0.18]
	B18	2 x 4 mm [0.079 x 0.16]
Color of figures		white on black
Count mechanism shaft		stainless steel
Relative humidity at +30 °C [+86 °F]		≤ 80 % (non-condensing)
Altitude		up to 2000 m [6562']
Mounting position		any
Operating life		approx. 200 x 10^6 pulses
Protection	with reset	IP40 (front side)
	without reset	IP41 (front side)
Weight	without reset	81 g [2.86 oz]
	with reset	83 g [2.93oz]
	socket box	14 g [0.49 oz]
Test voltage		2000 V ~ effective, acc. to VDE 0435
Device safety	designed to	EN 61010 part 1
	protection class	2
	application area	pollution level 2

Options

Color of housing black		Art. no. ref. to type 1.XXX.XX**1**.XXX
Electr. connection at counter		flat pins 0.8 x 2.8 mm [0.032 x 0.11"] with push on connectors Art. no. 1.XX**7**.XXX.XXX
Counter with flat pin 6.3 x 0.8 mm [0.25 x 0.032"]		on request 1.XX**X**.XXX.XXX.**011**
Screw terminal		Art. no. 1.XXX.XXX.XXX.**023**
Connection with flying leads		on request 1.XX**3**.XXX.XXX
Extended temperature range		on request
Key locking reset	grey	1.XXX.XX**6**.XXX
	black	1.XXX.XX**7**.XXX
	key for reset	G050265 (replacement part)

Approvals

CE compliant in accordance with	
EMC Directive	2014/30/EU
RoHS Directive	2011/65/EU
Low Voltage Directive	2014/35/EU
UKCA compliant in accordance with	
EMC Regulations	S.I. 2016/1091
RoHS Regulations	S.I. 2012/3032
Low Voltage Regulations	S.I. 2016/1101

Type / Counting mechanism

Voltage	Type	Pulse frequency max.	Pulse on time min.	Pulse interval min.	Pulse ratio	On-time	Power consump. approx.	Permi. residual ripple max.	Operating temp. (non-condensing)
V DC	0	10 Hz	60 ms	40 ms	3 : 2	100 %	1 W	48 %	-10 °C ... +60 °C [+14 °F ... +140 °F]
V DC	1	25 Hz	24 ms	16 ms	3 : 2	100 %	2 W	48 %	-10 °C ... +60 °C [+14 °F ... +140 °F]
V AC	a	18 Hz	22.2 ms	33.3 ms	2 : 3	100 %	2.9 VA	–	-10 °C ... +55 °C [+14 °F ... +131 °F]

Connection diagram

type
0 a.1, DC

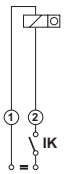

IK = Pulse contact

type
a, AC

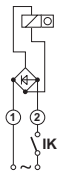

© Fritz Kübler GmbH, subject to errors and changes. 03/2023

Standard counters | 6 or 8 digits with/without reset (AC+DC) | B16 / B18

Without front bezel, rear mounting
6 digits, with reset

Type B16.01



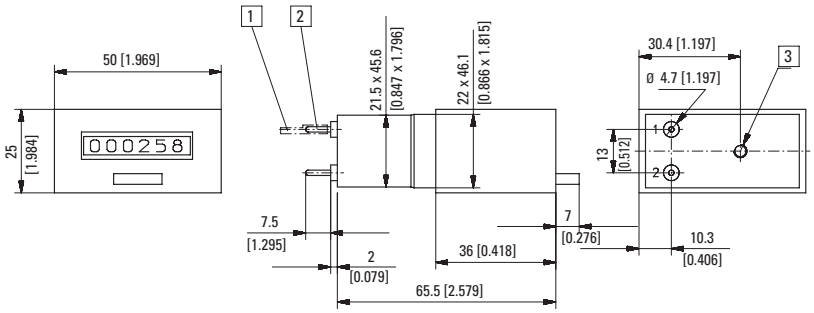

1 Push on connector ø 1.5 [0.059], tinned 2 Round pin ø 1.6 [0.063], tinned 3 M4, 5 [0.20] deep
Color of housing: beige (standard) – black, Art. no. 1.230.XX**1**.XXX

Type	Voltage	Display	Art. no. 12 V	24 V	115 V	230 V	
B16.01	DC (10 Hz) / 0	6 digits,	**1.230.012.012**	**1.230.012.013**			
	DC (25 Hz) / 1	with reset	**1.230.012.032**	**1.230.012.033**			
	AC (18 Hz) / a			**1.230.012.061**	**1.230.012.064**	**1.230.012.066**	

Panel mount with front bezel size no. 1 and 2 mounting holes
6 digits, without reset

Type B16.10



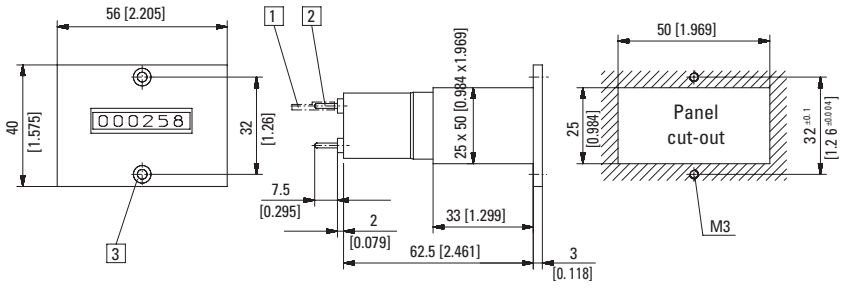

1 Push on connector ø 1.5 [0.059], tinned 2 Round pin ø 1.6 [0.063], tinned 3 Countersinking Af3 DIN 74
Color of housing: grey (standard) – black, Art. no. 1.230.10**1**.XXX

Type	Voltage	Display	Art. no. 12 V	24 V	115 V	230 V	
B16.10	DC (10 Hz) / 0	6 digits,	**1.230.100.012**	**1.230.100.013**			
	DC (25 Hz) / 1	without reset	**1.230.100.032**	**1.230.100.033**			
	AC (18 Hz) / a			**1.230.100.061**	**1.230.100.064**	**1.230.100.066**	

Panel mount with front bezel size no. 1 with 2 mounting holes
6 digits, with reset

Type B16.11



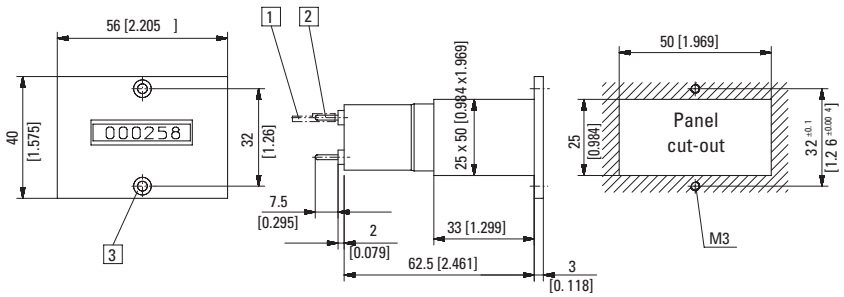

1 Push on connector ø 1.5 [0.059], tinned 2 Round pin ø 1.6 [0.063], tinned 3 Countersinking Af3 DIN 74
Color of housing: grey (standard) – black, Art. no. 1.230.11**1**.XXX

Type	Voltage	Display	Art. no. 12 V	24 V	115 V	230 V	
B16.11	DC (10 Hz) / 0	6 digits,	**1.230.110.012**	**1.230.110.013**			
	DC (25 Hz) / 1	with reset	**1.230.110.032**	**1.230.110.033** [1]			
	AC (18 Hz) / a			**1.230.110.061** [1]	**1.230.110.064**	**1.230.110.066** [1]	

Dimensions in mm [inch]

1) Stock types.

© Fritz Kübler GmbH, subject to errors and changes. 03/2023

Standard counters | 6 or 8 digits with/without reset (AC+DC) | B16 / B18

Panel mount for clip mounting
6 digits, without reset
Type B16.20



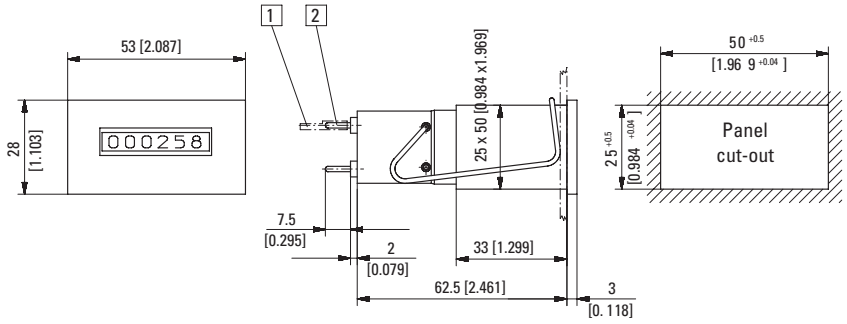

1 Push on connector ø 1.5 [0.059], tinned 2 Round pin ø 1.6 [0.063], tinned
Color of housing: grey (standard) – black, Art. no. 1.230.20**1**.XXX

Type	Voltage	Display	Art. no. 12 V	24 V	115 V	230 V	Further stock types:
B16.20	DC (10 Hz) / 0	6 digits,	**1.230.200.012**	**1.230.200.013**			1.237.201.066 230 V AC/a with flat pins
	DC (25 Hz) / 1	without reset	**1.230.200.032**	**1.230.200.033** 1)			
	AC (18 Hz) / a			**1.230.200.061**	**1.230.200.064**	**1.230.200.066**	

Panel mount for clip mounting
6 digits, with reset
Type B16.21



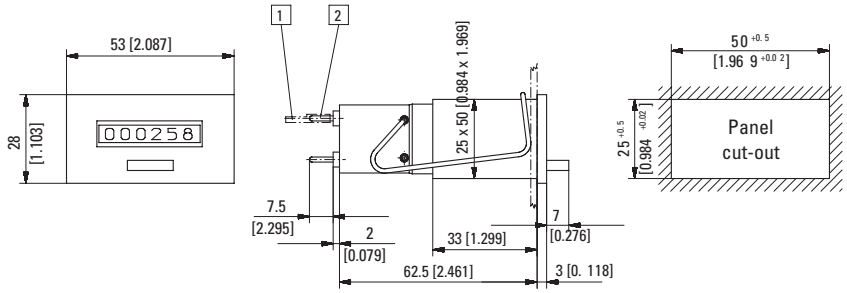

1 Push on connector ø 1.5 [0.059], tinned 2 Round pin ø 1.6 [0.063], tinned
Color of housing: grey (standard) – black, Art. no. 1.230.21**1**.XXX

Type	Voltage	Display	Art. no. 12 V	24 V	115 V	230 V	Further stock types:
B16.21	DC (10 Hz) / 0	6 digits,	**1.230.210.012**	**1.230.210.013** 1)			1.230.211.033 24 V DC/1 sw 1.230.217.013 24 V DC/0 sw vs 1.237.211.066 230 V AC/a sw
	DC (25 Hz) / 1	with reset	**1.230.210.032**	**1.230.210.033** 1)			
	AC (18 Hz) / a			**1.230.210.061**	**1.230.210.064**	**1.230.210.066** 1)	

Panel mount with front bezel size no. 3 and 2 mounting holes
6 digits, without reset
Type B16.30



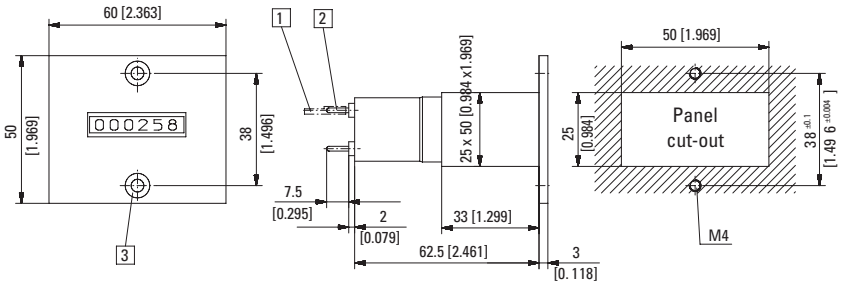

1 Push on connector ø 1.5 [0.059], tinned 2 Round pin ø 1.6 [0.063], tinned 3 Countersinking Am 4 DIN 74
Color of housing: grey (standard) – black, Art. no. 1.230.30**1**.XXX

Type	Voltage	Display	Art. no. 12 V	24 V	115 V	230 V	
B16.30	DC (10 Hz) / 0	6 digits,	**1.230.300.012**	**1.230.300.013**			
	DC (25 Hz) / 1	without reset	**1.230.300.032**	**1.230.300.033**			
	AC (18 Hz) / a			**1.230.300.061**	**1.230.300.064**	**1.230.300.066**	

Dimensions in mm [inch]

1) Stock types.

© Fritz Kübler GmbH, subject to errors and changes. 03/2023

Standard counters | 6 or 8 digits with/without reset (AC+DC) | B16 / B18

Panel mount with front bezel size no. 3 and 2 mounting holes

6 digits, with reset

Type B16.31



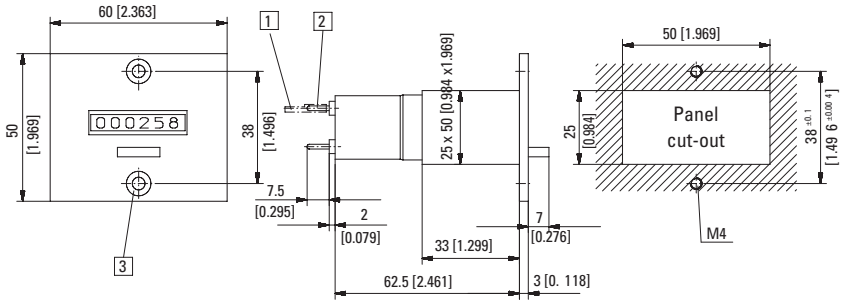

1 Push on connector ø 1.5 [0.059], tinned 2 Round pin ø 1.6 [0.063], tinned 3 Countersinking Bf 4 DIN 74

Color of housing: grey (standard) – black, Art. no. 1.230.11**1**.XXX

Type	Voltage	Display	Art. no. 12 V	24 V	115 V	230 V	
B16.31	DC (10 Hz) / 0	6 digits,	**1.230.310.012**	**1.230.310.013**			
	DC (25 Hz) / 1	with reset	**1.230.310.032**	**1.230.310.033**			
	AC (18 Hz) / a			**1.230.310.061**	**1.230.310.064**	**1.230.310.066**	

Without front bezel, rear mounting

8 digits, without reset

Type B18.00



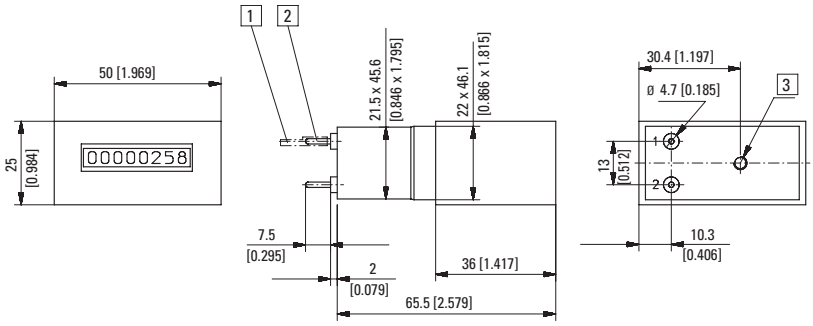

1 Push on connector ø 1.5 [0.059], tinned 2 Round pin ø 1.6 [0.063], tinned 3 M4, 5 [0.20] deep

Color of housing: beige (standard) – black, Art. no. 1.260.XX**1**.XXX

Type	Voltage	Display	Art. no. 12 V	24 V	115 V	230 V	
B18.00	DC (10 Hz) / 0	8 digits,	**1.260.002.012**	**1.260.002.013**			
	DC (25 Hz) / 1	without reset	**1.260.002.032**	**1.260.002.033** [1]			
	AC (18 Hz) / a			**1.260.002.061**	**1.260.002.064**	**1.260.002.066**	

Panel mount with front bezel size no. 1 and 2 mounting holes

8 digits, without reset

Type B18.10



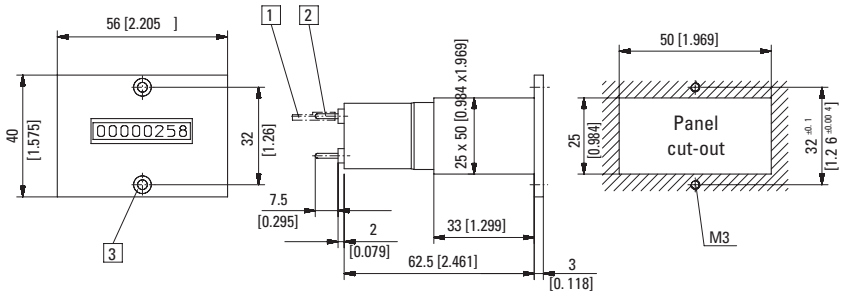

1 Push on connector ø 1.5 [0.059], tinned 2 Round pin ø 1.6 [0.063], tinned 3 Countersinking Af3 DIN 74

Color of housing: grey (standard) – black, Art. no. 1.260.10**1**.XXX

Type	Voltage	Display	Art. no. 12 V	24 V	115 V	230 V	
B18.10	DC (10 Hz) / 0	8 digits,	**1.260.100.012**	**1.260.100.013** [1]			
	DC (25 Hz) / 1	without reset	**1.260.100.032**	**1.260.100.033**			
	AC (18 Hz) / a			**1.260.100.061**	**1.260.100.064**	**1.260.100.066**	

Dimensions in mm [inch]

1) Stock types.

© Fritz Kübler GmbH, subject to errors and changes. 03/2023

Standard counters | 6 or 8 digits with/without reset (AC+DC) | B16 / B18

Panel mount for clip mounting
8 digits, without reset
Type B18.20



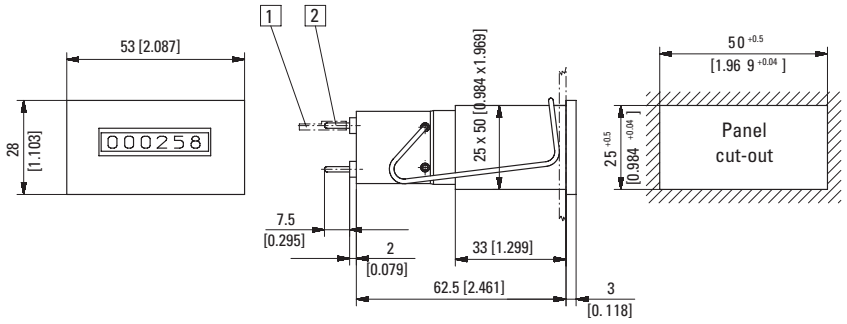

1 Push on connector ø 1.5 [0.059], tinned 2 Round pin ø 1.6 [0.063], tinned
Color of housing: grey (standard) – black, Art. no. 1.260.20**1**.XXX

Type	Voltage	Display	Art. no. 12 V	24 V	115 V	230 V	Further stock types:
B18.20	DC (10 Hz) / 0	8 digits,	**1.260.200.012**	**1.260.200.013** 1)			1.260.201.013
	DC (25 Hz) / 1	without reset	**1.260.200.032**	**1.260.200.033** 1)			
	AC (18 Hz) / a			**1.260.200.061**	**1.260.200.064**	**1.260.200.066** 1)	

Panel mount with front bezel size no. 3 and 2 mounting holes
8 digits, without reset
Type B18.30



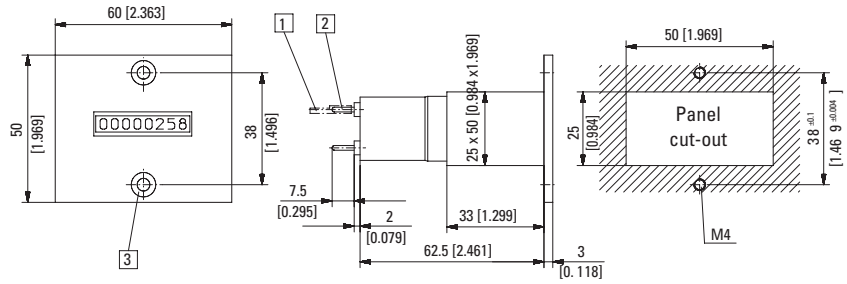

1 Push on connector ø 1.5 [0.059], tinned 2 Round pin ø 1.6 [0.063], tinned 3 Countersinking Am 4 DIN 74
Color of housing: grey (standard) – black, Art. no. 1.260.30**1**.XXX

Type	Voltage	Display	Art. no. 12 V	24 V	115 V	230 V	
B18.30	DC (10 Hz) / 0	8 digits,	**1.260.300.012**	**1.260.300.013**			
	DC (25 Hz) / 1	without reset	**1.260.300.032**	**1.260.300.033**			
	AC (18 Hz) / a			**1.260.300.061**	**1.260.300.064**	**1.260.300.066**	

Dimensions in mm [inch]

1) Stock types.

© Fritz Kübler GmbH, subject to errors and changes. 03/2023