SCHAEFFLER

FAG



3803-B-2RS-TVH-HLC

Angular contact ball bearing

Schaeffler ID:
0734744520000

Angular contact ball bearing 38..-B-2RS-TVH, double row, seals, plastic cage

Technical information

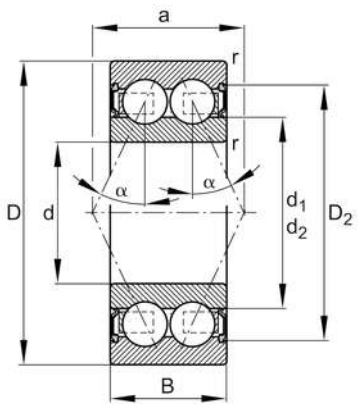

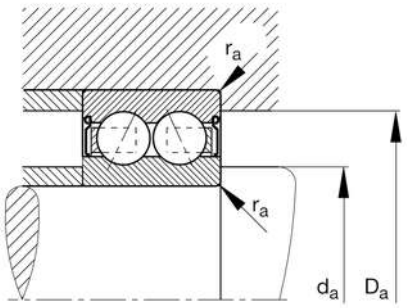

Main Dimensions & Performance Data

d	17 mm	Bore diameter
D	26 mm	Outside diameter
B	7 mm	Width
C_r	2.430 N	Basic dynamic load rating, radial
C_{0r}	2.020 N	Basic static load rating, radial
C_{ur}	117 N	Fatigue load limit, radial
n_G	13.200 1/min	Limiting speed
	0,014 kg	Weight

Mounting dimensions

$d_{a\ min}$	19 mm	Minimum diameter shaft shoulder
$D_{a\ max}$	24 mm	Maximum diameter of housing shoulder
$r_{a\ max}$	0,3 mm	Maximum fillet radius

Dimensions

r_{min}	0,3 mm	Minimum chamfer dimension
D_2	23,8 mm	Caliber diameter outer ring
d_2	19,2 mm	Caliber diamter inner ring
a	12,3 mm	Distance between the apexes of the pressure cones
α	25 °	Contact angle

Temperature range

T_{min}	-20 °C	Operating temperature min.
T_{max}	100 °C	Operating temperature max.

The datasheet is only an overview of dimensions and basic load ratings of the selected product. Please always observe all further information and guidelines for this product. For further information you can use the contact form on our website.