Draw-wire encoder A40 | Compact-Line | Measuring length max. 2 m

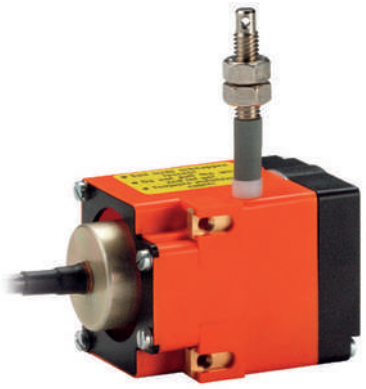

The draw wire system A40 with incremental encoder excels with its compact construction.

Wide temperature range | High protection level | Reverse polarity protection | Easy mounting | Compact design

Compact and simple

- Measuring length up to 2000 mm.
- For applications with low traverse speeds.
- Easy mounting.
- Housing of reinforced plastic.

Order code draw-wire encoder

D5.2	XXX	.	24	XX	.	1000
Type	a			b		

a *Steel wire, length*
501 = 1000 mm
102 = 2000 mm

b *Output circuit / supply voltage*
21 = Push-pull with inverted signal / 5 ... 24 V DC
41 = Push-pull with inverted signal / 8 ... 30 V DC

Stock types
D5.2102.2421.1000
D5.2102.2441.1000
D5.2501.2421.1000
D5.2501.2441.1000

Accessories for draw-wire encoder

Dimensions in mm [inch]

Order no.

Guide pulley — **8.0000.7000.0045**



Technical data:
- mounting bracket (anodized alum.)
- guide pulley (plastic POM)
- ball bearing (type 696-2R5)

Scope of delivery:
- 2 x countersunk screws for lateral fixing
- 2 x hexagonal screws for fixing on a flat surface

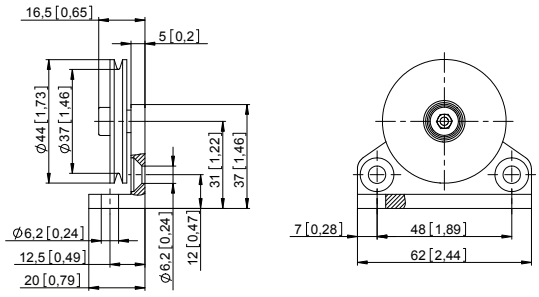

Extension cable (further on request)



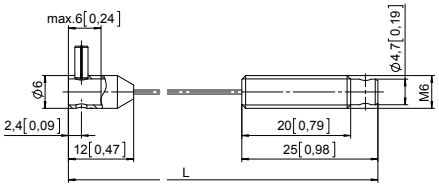

Steel wire 2 m [6.56']	**8.0000.7000.0033**
Steel wire 5 m [16.40']	**8.0000.7000.0034**
Steel wire 10 m [32.81']	**8.0000.7000.0035**
Paraleine 2 m [6.56']	**8.0000.7000.0032**

© Fritz Kübler GmbH, subject to errors and changes. 02/2023

Draw-wire encoder A40 | Compact-Line | Measuring length max. 2 m

Technical data

Mechanical characteristics (draw-wire mechanics)

Measuring range		up to 2000 mm
Absolute accuracy		±0.1 % for the whole measuring range
Repetition accuracy		±0.15 mm per direction of travel
Resolution (incremental)		0.1 mm standard encoder with 1000 ppr
Speed max.		800 mm/s
Acceleration max.		43 m/s²
Required force		approx. 10 N (on wire)
Material	housing wire	reinforced plastic stainless steel ø 0.45 mm
Weight		approx. 210 g [7.41 oz]

Approvals

CE compliant in accordance with	
EMC Directive	2014/30/EU
RoHS Directive	2011/65/EU
UKCA compliant in accordance with	
EMC Regulations	S.I. 2016/1091
RoHS Regulations	S.I. 2012/3032

Electrical characteristics (encoder)

Output circuits		Push-pull	Push-pull
Supply voltage		5 ... 24 V DC	8 ... 30 V DC
Current consumption (no load)		max. 50 mA	max. 50 mA
Permissible load / channel		max. +/- 50 mA	max. +/- 50 mA
Pulse rate		max. 160 kHz	max. 160 kHz
Switching level	HIGH LOW	min. +V - 2.5 V max. 0.5 V	min. +V - 3.0 V max. 2.5 V
Rising edge time t_r		max. 1 µs	max. 1 µs
Falling edge time t_f		max. 1 µs	max. 1 µs
Short-circuit protected outputs		yes	yes

Mechanical characteristics (encoder)

Protection acc. to EN 60529	IP54
Working temperature	-20 °C ... +85 °C [-4 °F ... +185 °F]
Shock resistance acc. to EN 60068-2-27	1000 m/s², 6 ms
Vibration resistance acc. to EN 60068-2-6	100 m/s², 55 ... 2000 Hz

Description of the incremental encoder (connected on load side)

- Compensation for temperature and ageing
- Short-circuit protected outputs
- Reverse polarity protected supply voltage input
- Push-pull output

Terminal assignment of the encoder

Signal	0 V	+V	A	$\overline{A}$	B	$\overline{B}$	0	$\overline{0}$
Core color	WH	BN	GN	YE	GY	PK	BU	RD

Isolate unused outputs before initial start-up.

© Fritz Kübler GmbH, subject to errors and changes. 02/2023

Draw-wire encoder A40 | **Compact-Line** | **Measuring length max. 2 m**

Dimensions

Dimensions in mm [inch]

1 2 x M4, max. screw-in depth 8 mm [0.32“]

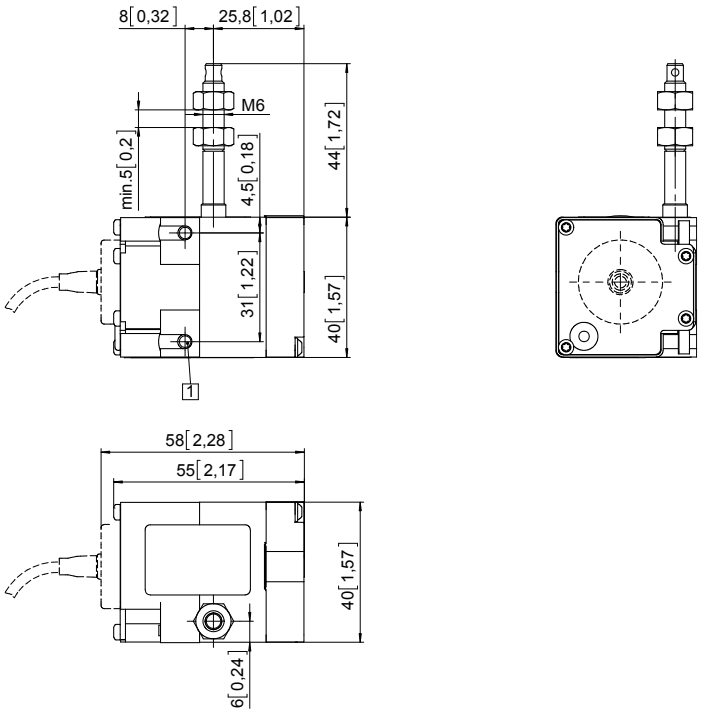

© Fritz Kübler GmbH, subject to errors and changes. 02/2023