Y-bearing plummer block units with pressed steel housing

d **12–45** mm

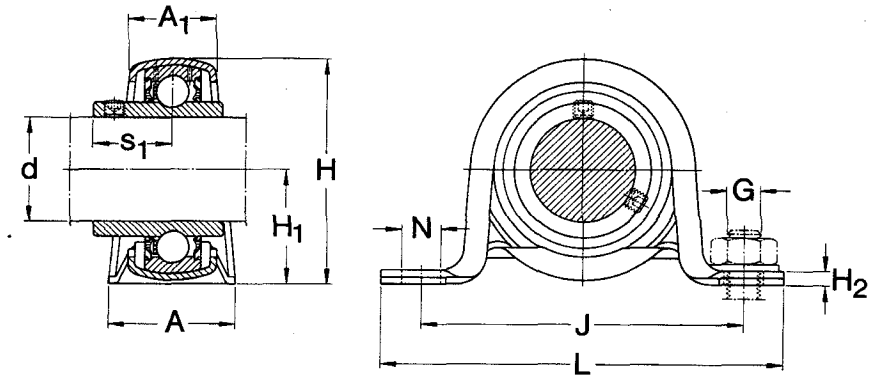

Dimensions											Permissible housing load	Mass	Designations		
													Unit[1]	Housing	Y-bearing
d	A	A_1	H	H_1	H_2	J	L	N	G	s_1	radial				
mm											N	kg	–		
12	26	18	44	22	3	68	86	9,6	8	22,1	1 250	0,20	**P 12 FM**	P 40	YET 203/12
										15,9	1 250	0,19	**P 12 TF**	P 40	YAR 203/12-2F
15	26	18	44	22	3	68	86	9,6	8	22,1	1 250	0,19	**P 15 FM**	P 40	YET 203/15
										15,9	1 250	0,17	**P 15 TF**	P 40	YAR 203/15-2F
17	26	18	44	22	3	68	86	9,6	8	22,1	1 250	0,18	**P 17 FM**	P 40	YET 203
										23,4	1 250	0,20	**P 17 WM**	P 40	YEL 203
										15,9	1 250	0,16	**P 17 TF**	P 40	YAR 203-2F
20	32	21	50	25,2	3	76	99	9,6	8	23,5	1 700	0,24	**P 20 FM**	P 47	YET 204
										26,6	1 700	0,27	**P 20 WM**	P 47	YEL 204
										18,3	1 700	0,22	**P 20 TF**	P 47	YAR 204-2F
										20,5	1 700	0,22	**P 20 K**	P 47	362004 ATN
25	32	24	56	28,3	3,2	86	108	11,2	10	23,5	1 800	0,28	**P 25 FM**	P 52	YET 205
										26,9	1 800	0,33	**P 25 WM**	P 52	YEL 205
										19,8	1 800	0,27	**P 25 TF**	P 52	YAR 205-2F
										20,5	1 800	0,27	**P 25 K**	P 52	362005 ATN
30	38	25	66	32,9	4	95	119	11,2	10	26,7	2 600	0,47	**P 30 FM**	P 62	YET 206
										30,1	2 600	0,53	**P 30 WM**	P 62	YEL 206
										22,2	2 600	0,45	**P 30 TF**	P 62	YAR 206-2F
										23	2 600	0,44	**P 30 K**	P 62	362006 ATN
35	41	27	78	39,2	5	106	130	11,2	10	29,4	3 300	0,75	**P 35 FM**	P 72	YET 207
										32,3	3 300	0,81	**P 35 WM**	P 72	YEL 207
										25,4	3 300	0,67	**P 35 TF**	P 72	YAR 207-2F
										24,5	3 300	0,66	**P 35 K**	P 72	362007 A
40	43	29	86	43,5	5	120	148	14	12	32,7	3 800	0,99	**P 40 FM**	P 80	YET 208
										34,9	3 800	1,05	**P 40 WM**	P 80	YEL 208
										30,2	3 800	0,92	**P 40 TF**	P 80	YAR 208-2F
										27	3 800	0,91	**P 40 K**	P 80	362008 A
45	45	31	92	46,4	6	128	156	14	12	32,7	4 200	1,05	**P 45 FM**	P 85	YET 209
										34,9	4 200	1,15	**P 45 WM**	P 85	YEL 209
										30,2	4 200	1,00	**P 45 TF**	P 85	YAR 209-2F

[1] The units P-WM are also available with flingers; they then carry the suffix F, e.g. P 17 WF
The units P-TF are also available without flingers; they then carry the suffix M, e.g. P 12 TM

SKF

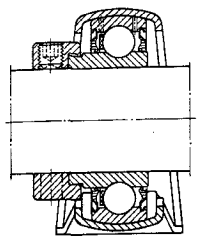

Series P-FM

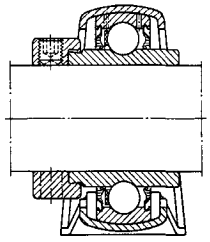

Series P-WM

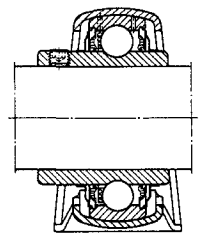

Series P-TF

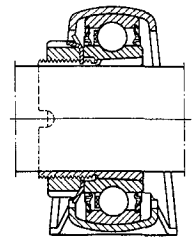

Series P-K

Y-bearing plummer block units with pressed steel housing for inch shafts

d 5/8–1 3/4 in

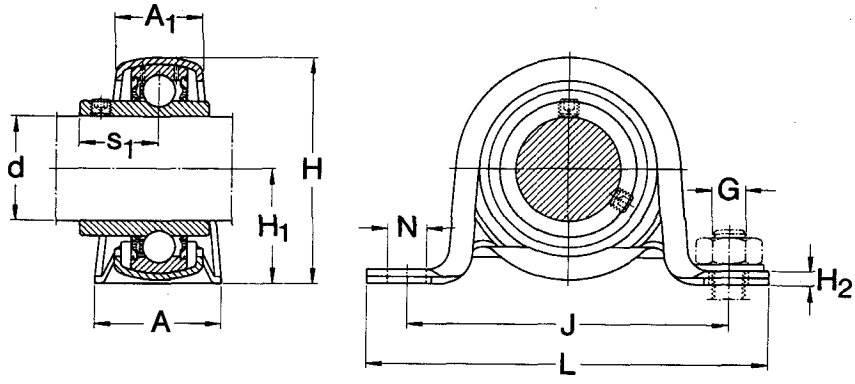

Dimensions											Permissible housing load	Mass	Designations Unit[1]	Housing	Y-bearing
d	A	A_1	H	H_1	H_2	J	L	N	G	s_1	radial				
in	mm										N	kg	–		
5/8	26	18	44	22	3	68	86	9,6	8	22,1	1 250	0,19	**P 5/8 FM**	P 40	YET 203-010
										23,4	1 250	0,20	**P 5/8 WM**	P 40	YEL 203-010
										15,9	1 250	0,16	**P 5/8 TF**	P 40	YAR 203-010-2F
11/16	26	18	44	22	3	68	86	9,6	8	22,1	1 250	0,18	**P 11/16 FM**	P 40	YET 203-011
										23,4	1 250	0,19	**P 11/16 WM**	P 40	YEL 203-011
										15,9	1 250	0,16	**P 11/16 TF**	P 40	YAR 203-011-2F
3/4	32	21	50	25,2	3	76	99	9,6	8	23,5	1 700	0,25	**P 3/4 FM**	P 47	YET 204-012
										26,6	1 700	0,28	**P 3/4 WM**	P 47	YEL 204-012
										18,3	1 700	0,22	**P 3/4 TF**	P 47	YAR 204-012-2F
13/16	32	24	56	28,3	3,2	86	108	11,2	10	23,5	1 800	0,32	**P 13/16 FM**	P 52	YET 205-013
										26,9	1 800	0,38	**P 13/16 WM**	P 52	YEL 205-013
										19,8	1 800	0,31	**P 13/16 TF**	P 52	YAR 205-013-2F
7/8	32	24	56	28,3	3,2	86	108	11,2	10	23,5	1 800	0,31	**P 7/8 FM**	P 52	YET 205-014
										26,9	1 800	0,36	**P 7/8 WM**	P 52	YEL 205-014
										19,8	1 800	0,30	**P 7/8 TF**	P 52	YAR 205-014-2F
15/16	32	24	56	28,3	3,2	86	108	11,2	10	23,5	1 800	0,30	**P 15/16 FM**	P 52	YET 205-015
										26,9	1 800	0,34	**P 15/16 WM**	P 52	YEL 205-015
										19,8	1 800	0,28	**P 15/16 TF**	P 52	YAR 205-015-2F
1	32	24	56	28,3	3,2	86	108	11,2	10	23,5	1 800	0,28	**P 1. FM**	P 52	YET 205-100
										26,9	1 800	0,32	**P 1. WM**	P 52	YEL 205-100
										19,8	1 800	0,27	**P 1. TF**	P 52	YAR 205-100-2F
1 1/8	38	25	66	32,9	4	95	119	11,2	10	26,7	2 600	0,47	**P 1.1/8 FM**	P 62	YET 206-102
										30,1	2 600	0,53	**P 1.1/8 WM**	P 62	YEL 206-102
										22,2	2 600	0,45	**P 1.1/8 TF**	P 62	YAR 206-102-2F
1 3/16	38	25	66	32,9	4	95	119	11,2	10	26,7	2 600	0,47	**P 1.3/16 FM**	P 62	YET 206-103
										30,1	2 600	0,52	**P 1.3/16 WM**	P 62	YEL 206-103
										22,2	2 600	0,44	**P 1.3/16 TF**	P 62	YAR 206-103-2F

[1] The units P-WM are also available with flingers; they then carry the suffix F, e.g. P 5/8 WF
The units P-TF are also available without flingers; they then carry the suffix M, e.g. P 5/8 TM

SKF

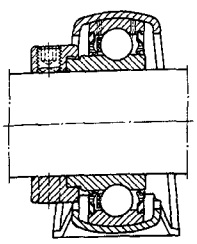

Series P-FM

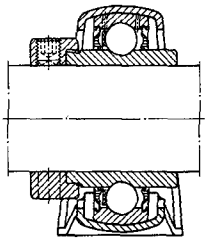

Series P-WM

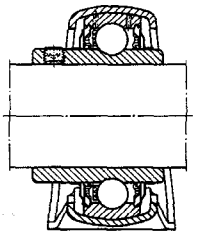

Series P-TF

Dimensions											Permissible housing load	Mass	Designations Unit[1]	Housing	Y-bearing
d	A	A_1	H	H_1	H_2	J	L	N	G	s_1	radial				
in	mm										N	kg	–		
1 1/4	38	25	66	32,9	4	95	119	11,2	10	26,7	2 600	0,45	**P 1.1/4 AFM**	P 62	YET 206-104
										30,1	2 600	0,49	**P 1.1/4 AWM**	P 62	YEL 206-104
										22,2	2 600	0,42	**P 1.1/4 ATF**	P 62	YAR 206-104-2F
	41	27	78	39,2	5	106	130	11,2	10	29,4	3 300	0,80	**P 1.1/4 FM**	P 72	YET 207-104
										32,3	3 300	0,88	**P 1.1/4 WM**	P 72	YEL 207-104
										25,4	3 300	0,62	**P 1.1/4 TF**	P 72	YAR 207-104-2F
1 5/16	41	27	78	39,2	5	106	130	11,2	10	29,4	3 300	0,75	**P 1.5/16 FM**	P 72	YET 207-105
										32,3	3 300	0,85	**P 1.5/16 WM**	P 72	YEL 207-105
										25,4	3 300	0,70	**P 1.5/16 TF**	P 72	YAR 207-105-2F
1 3/8	41	27	78	39,2	5	106	130	11,2	10	29,4	3 300	0,75	**P 1.3/8 FM**	P 72	YET 207-106
										32,3	3 300	0,82	**P 1.3/8 WM**	P 72	YEL 207-106
										25,4	3 300	0,67	**P 1.3/8 TF**	P 72	YAR 207-106-2F
1 7/16	41	27	78	39,2	5	106	130	11,2	10	29,4	3 300	0,72	**P 1.7/16 FM**	P 72	YET 207-107
										32,3	3 300	0,78	**P 1.7/16 WM**	P 72	YEL 207-107
										25,4	3 300	0,64	**P 1.7/16 TF**	P 72	YAR 207-107-2F
1 1/2	43	29	86	43,5	5	120	148	14	12	32,7	3 800	1,05	**P 1.1/2 FM**	P 80	YET 208-108
										34,9	3 800	1,10	**P 1.1/2 WM**	P 80	YEL 208-108
										30,2	3 800	0,96	**P 1.1/2 TF**	P 80	YAR 208-108-2F
1 9/16	43	29	86	43,5	5	120	148	14	12	32,7	3 800	1,00	**P 1.9/16 FM**	P 80	YET 208-109
										34,9	3 800	1,10	**P 1.9/16 WM**	P 80	YEL 208-109
										30,2	3 800	0,93	**P 1.9/16 TF**	P 80	YAR 208-109-2F
1 5/8	45	31	92	46,4	6	128	156	14	12	32,7	4 200	1,15	**P 1.5/8 FM**	P 85	YET 209-110
										34,9	4 200	1,25	**P 1.5/8 WM**	P 85	YEL 209-110
										30,2	4 200	1,10	**P 1.5/8 TF**	P 85	YAR 209-110-2F
1 11/16	45	31	92	46,4	6	128	156	14	12	32,7	4 200	1,10	**P 1.11/16 FM**	P 85	YET 209-111
										34,9	4 200	1,20	**P 1.11/16 WM**	P 85	YEL 209-111
										30,2	4 200	1,05	**P 1.11/16 TF**	P 85	YAR 209-111-2F
1 3/4	45	31	92	46,4	6	128	156	14	12	32,7	4 200	1,05	**P 1.3/4 FM**	P 85	YET 209-112
										34,9	4 200	1,15	**P 1.3/4 WM**	P 85	YEL 209-112
										30,2	4 200	1,05	**P 1.3/4 TF**	P 85	YAR 209-112-2F

[1] The units P-WM are also available with flingers; they then carry the suffix F, e.g. P 1.1/4 WF
The units P-TF are also available without flingers; they then carry the suffix M, e.g. P 1.1/4 TM