ITW Switches
SENSORS, SWITCHES, ELECTRONIC CONTROLS

SERIES 76-94 – VANDAL RESISTANT PUSHBUTTON

The Series 76-94 has been designed to cover a wide range of harsh environmental applications. The range is available in 3 styles, pushbutton, rotary and panel lamp.

The pushbutton comes in 4 button styles with 3 colour options and has solder/faston terminals as standard. The rotary is a single pole, 2 position, snap action switch with green or red spot indicator on the black actuator. To complete the range an indicator version is available with red, green or amber lens.

The entire range is panel sealed to IP67 and due to the construction and the materials used, are all capable of surviving the impact of a 5kg mass dropped from 40cm (20J). All the bezels and the actuators of the push-buttons and rotaries are made from a non-sparking zinc alloy whilst the panel lamp lens is manufactured from polycarbonate, which maintains the specification of the range.

Non-standard options for the range include custom colours, PCB terminals, gold contacts and 2 pole variants.

The features of the Series makes it ideal for robust, potentially explosive environments.



APPLICATIONS:

- Military environments
- Robust industrial
- Vandal resistant requirements
- Mining industry
- Petrochemical
- Process control
- Material handling

KEY FEATURES:

- Non-spark material
- Explosive-proof materials used
- Wide temperature range
- Panel Sealed to IP67
- Impact rating - 20J
- Choice of actuators and styles -Push-buttons, rotary and panel lamp

NON-STANDARD OPTIONS:

- PCB terminals
- Gold contacts
- 2 poles available
- Colour variants
- In-filled engraving (Push-button only)

PRODUCT DRAWINGS

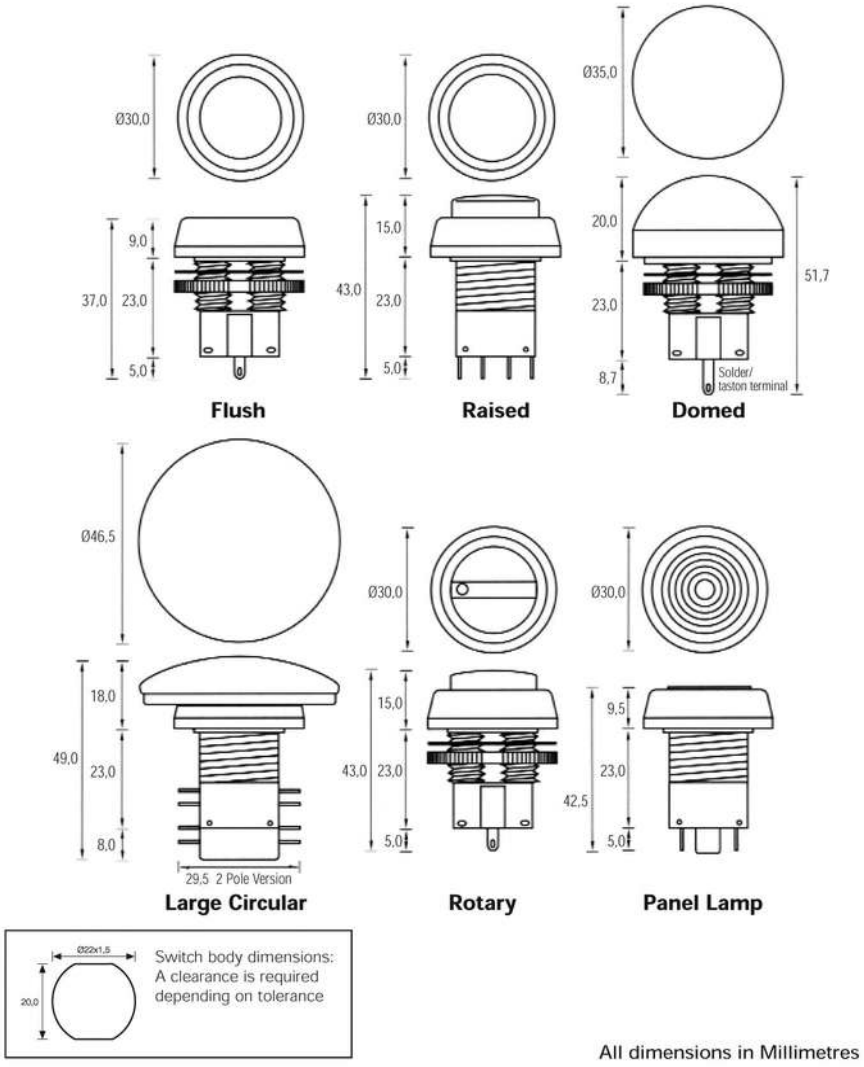

All dimensions in Millimetres

CIRCUIT FORM:



INGRESS PROTECTION IMPACT KEY

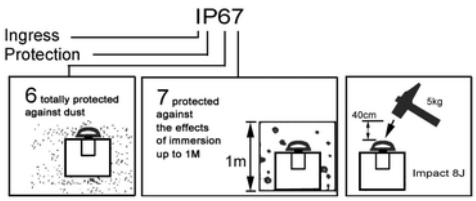

Copyright © 2015. ITW Switches 5/2015

PANEL MOUNTING & CONSTRUCTION INFORMATION:

The 76-94 mounts easily into panels not exceeding 6mm thickness. Front panel sealing to IP67 is achieved by use of the sealing washer which is fitted to the switch before it is inserted into the panel hole cut out. It is held into the panel by means of a zinc lock nut, tightened down to a torque of between 1.5Nm to 2.85Nm to achieve the correct sealing pressure.
It is mounted into a standard 22.5mm diameter hole and a double 'D' flat is provided to prevent rotation if required.

LAMP CONSTRUCTION & MULTI-POLE INFORMATION:

The 76-94 panel lamp variant is supplied with a quick release bulb holder that will accept a T1¾ wedge base filament lamp. Because of the wide range of illumination available (different voltage lamps, multi chip LEDs etc.), we do not supply a bulb as standard although we are prepared to do so if required. The push-button and rotary versions have a non-standard option of 2 poles. The 2 pole switch is provided separate to the switch body and must be fitted, via a spring clip, after the switch body has been mounted in the panel.

For more information, please contact the Sales Office.

KEY:

PB
Push-button

R
Rotary

L
Panel Lamp Indicator

ORDERING INFORMATION:

Series	Button Style	Style / Lens Colour *	Termination & No. of Poles	Button / Indicator Colour ***
76-94	1 - Flush 2 - Raised 3 - Large Circular (latching) 4 - Large Circular (momentary) 5 - Domed 6 - Panel lamp indicator 7 - Rotary	0 - Push-button & rotary R - Red ** G - Green ** A - Amber **	439088 - Solder/Faston 1 pole 4044 - Soler 1 pole 804 - Solder 2 poles	B - Black R - Red G - Green W - White N - Blue Y - Yellow X - Clear Passivated (Large Circular Only)

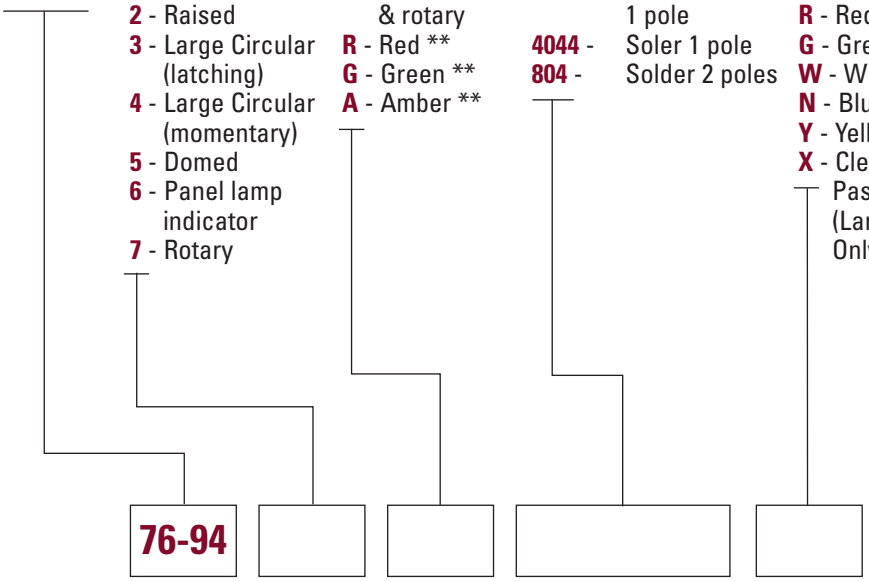

* No addition to the part number is required for the indicator after this

** Panel lamp indicator only

*** For rotary: standard black actuator, specify colour of dot indicator, red & green only

Part Number examples:

76-9440/4044R - Large Circular Push Button, Solder 1 pole, Red (Button)
76-9470/4044G - Rotary, Solder 1 pole, Green (Indicator)
76-946A - Panel Lamp Indicator, Amber (Lens)

Designs and specifications are subject to change without notice due to product improvement.

MECHANICAL / ELECTRICAL / ENVIRONMENTAL CHARACTERISTICS:

Travel:
2,5mm (PB)

Life (nom):
2,000,000 cycles (PB)
50,000 cycles (R)
100,000 cycles (Maintained Push-button)

Operating force:
7N (PB)

Contact bounce:
5ms (PB, R)

Panel thickness (max):
6mm (PB, R, L)

Dielectric strength:
1000V RMS (PB, R)

Insulation resistance:
1GΩ (PB, R)

Contact resistance (initial):
25mΩ (PB, R)

Current rating (max):
10A resistive 250V a.c. (PB, R)

Life:
100,000 cycles 20°C (PB, R)
50,000 cycles 70°C (PB, R)

Illumination type:
T1¾ Wedge base bulb (L)

Ingress protection:
IP67 (Panel Sealed) (PB, R, L)

Impact rating:
20J (PB, R, L)

Shock:
50g (PB, R, L)

Operating temperature range:
-40°C to +125°C (PB, R, L)

Body material:
Zinc alloy (PB, R, L)

Actuator material:
Zinc alloy (PB, R)

Lens material:
Polycarbonate (L)

Contact material:
Fine silver (PB, R)

Copyright © 2015. ITW Switches 5/2015

ITW Switches
SENSORS, SWITCHES, ELECTRONIC CONTROLS

+ 44 (0) 2392 656200