

Model Number

UB2000-F54-I-V15

Single head system

Features

- **Analog output 4 mA ... 20 mA**
- **Measuring window adjustable**
- **Program input**
- **Synchronization options**
- **Deactivation option**
- **Temperature compensation**

Diagrams

Characteristic response curve

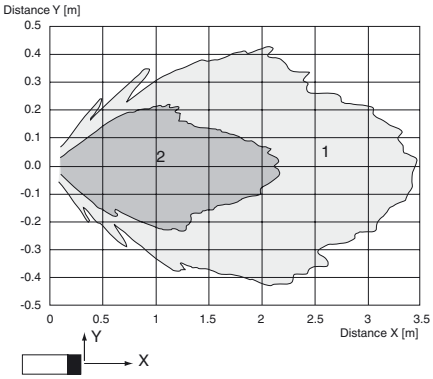

Curve 1: flat surface 100 mm x 100 mm
Curve 2: round bar, Ø 25 mm

Technical data

General specifications	
Sensing range	80 ... 2000 mm
Adjustment range	100 ... 2000 mm
Unusable area	0 ... 80 mm
Standard target plate	100 mm x 100 mm
Transducer frequency	approx. 175 kHz
Response delay	≤ 150 ms
Indicators/operating means	
LED green	solid green: monitoring system green flashing: program function
LED yellow	solid yellow: object in the evaluation range yellow, flashing: program function, object detected
LED red	flashing: normal mode: error Program function: no object detected permanently: Program mode, object uncertain
Electrical specifications	
Operating voltage U_B	10 ... 30 V DC , ripple 10 %$_{SS}$
No-load supply current I_0	≤ 55 mA
Input/Output	
Synchronization	1 synchronous input 0-level: -U_B...+1 V 1-level: +4 V...+U_B input impedance: > 12 KOhm synchronization pulse: 0,1 ... 28 ms
Synchronization frequency	
Common mode operation	≤ 33 Hz
Multiplex operation	≤ 33 / n Hz, n = number of sensors
Input	
Input type	1 program input lower evaluation limit A1: -U_B ... +1 V, upper evaluation limit A2: +4 V ... +U_B input impedance: > 4.7 kΩ, pulse duration: ≥ 1 s
Output	
Output type	1 analog output 4 ... 20 mA
Default setting	evaluation limit A1: 100 mm evaluation limit A2: 2000 mm
Resolution	0.5 mm
Deviation of the characteristic curve	± 1 % of full-scale value
Repeat accuracy	± 0.1 % of full-scale value
Load impedance	0 ... 300 Ohm
Temperature influence	± 1.5 % of full-scale value
Ambient conditions	
Ambient temperature	-25 ... 70 °C (-13 ... 158 °F)
Storage temperature	-40 ... 85 °C (-40 ... 185 °F)
Mechanical specifications	
Connection type	Device connector M12 x 1 , 5-pin
Protection degree	IP65
Material	
Housing	ABS
Transducer	epoxy resin/hollow glass sphere mixture; polyurethane foam
Mass	100 g
Compliance with standards and directives	
Standard conformity	
Standards	EN 60947-5-2:2007 IEC 60947-5-2:2007 EN 60947-5-7:2003 IEC 60947-5-7:2003
Approvals and certificates	
UL approval	cULus Listed, General Purpose
CSA approval	cCSAus Listed, General Purpose

Release date: 2011-08-16 09:04 Date of issue: 2011-08-16 108162_eng.xml

Subject to reasonable modifications due to technical advances.
Copyright Pepperl+Fuchs, Printed in Germany

Dimensions

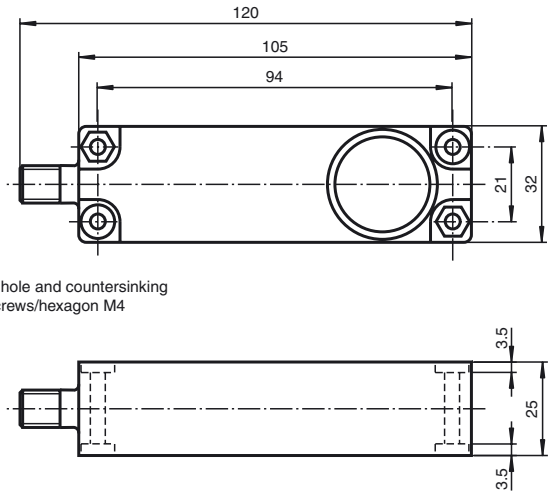

Bore hole and countersinking
for screws/hexagon M4

Electrical Connection

Standard symbol/Connections:
(version I)

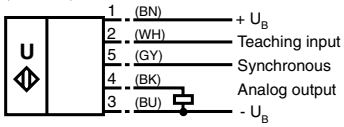

Core colours in accordance with EN 60947-5-2.

Pinout

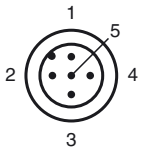

Wire colors in accordance with EN 60947-5-2

1	BN	(brown)
2	WH	(white)
3	BU	(blue)
4	BK	(black)
5	GY	(gray)

Synchronisation

The sensor features a synchronisation input for the suppression of mutual interference. If this input is not used, the sensor will operate using an internally generated clock rate. The synchronisation of multiple sensors can be realised as follows:

Additional Information

Programmed analogue output function

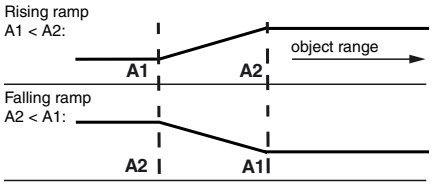

Accessories

UB-PROG2
Programming unit

V15-G-2M-PVC
Cable socket, M12, 5-pin, PVC cable

V15-W-2M-PUR
Cable socket, M12, 5-pin, PUR cable

Release date: 2011-08-16 09:04 Date of issue: 2011-08-16 108162_eng.xml

Subject to reasonable modifications due to technical advances. Copyright Pepperl+Fuchs, Printed in Germany
Pepperl+Fuchs Group • Tel.: Germany +49 621 776-0 • USA +1 330 4253555 • Singapore +65 67799091 • Internet http://www.pepperl-fuchs.com

External synchronisation:
The sensor can be synchronised by the external application of a square wave voltage. A synchronisation pulse at the synchronisation input starts a measuring cycle. The pulse must have a duration greater than 100 µs. The measuring cycle starts with the falling edge of a synchronisation pulse. A low level > 1 s or an open synchronisation input will result in the normal operation of the sensor. A high level at the synchronisation input disables the sensor.

Two operating modes are available:
1. Multiple sensors can be controlled by the same synchronisation signal. The sensors are synchronised.
2. The synchronisation pulses are sent cyclically to individual sensors. The sensors operate in multiplex mode.

Internal synchronisation:
The synchronisation connections of up to 5 sensors capable of internal synchronisation are connected to one another. When power is applied, these sensors will operate in multiplex mode.
The response delay increases according to the number of sensors to be synchronised.

Synchronisation cannot be performed during TEACH-IN and vice versa. The sensors must be operated in an unsynchronised manner to teach the evaluation limits.

Note:

If the option for synchronisation is not used, the synchronisation input has to be connected to ground (0V) or the sensor has to be operated via a V1 cable connector (4-pin).

Adjusting the evaluation range (analogue output)

The ultrasonic sensor has an analogue output with programmable evaluation limits. These are set by applying the supply voltage $-U_B$ or $+U_B$ to the TEACH-IN input. The supply voltage must be applied to the TEACH-IN input for at least 1 s. LEDs indicate whether the sensor has recognised the target during the TEACH-IN procedure. The lower evaluation limit A1 is taught with $-U_B$, A2 with $+U_B$.

Two different output functions can be set:
1. Analogue value increases with rising distance to object (rising ramp)
2. Analogue value falls with rising distance to object (falling rampe)

TEACH-IN rising ramp (A1 > A2)
- Position object at lower evaluation limit
- TEACH-IN lower limit A1 with $-U_B$
- Position object at upper evaluation limit
- TEACH-IN upper limit A2 with $+U_B$

TEACH-IN falling ramp (A1 > A):
- Position object at lower evaluation limit
- TEACH-IN lower limit A2 with $+U_B$
- Position object at upper evaluation limit
- TEACH-IN upper limit A1 with $-U_B$

LED Displays

Displays in dependence on operating mode	Red LED	Yellow LED	Green LED
TEACH-IN evaluation limit			
Object detected	off	flashes	flashes
No object detected	flashes	off	flashes
Object uncertain (TEACH-IN invalid)	on	off	flashes
Normal mode (evaluation range)	off	on	on
Fault	flashes	previous state	off

Release date: 2011-08-16 09:04 Date of issue: 2011-08-16 108162_eng.xml

Copyright Pepperl+Fuchs, Printed in Germany