E11436

Jumper cable with valve plug

VVSAC031MSS00,3H03STGH030MSS

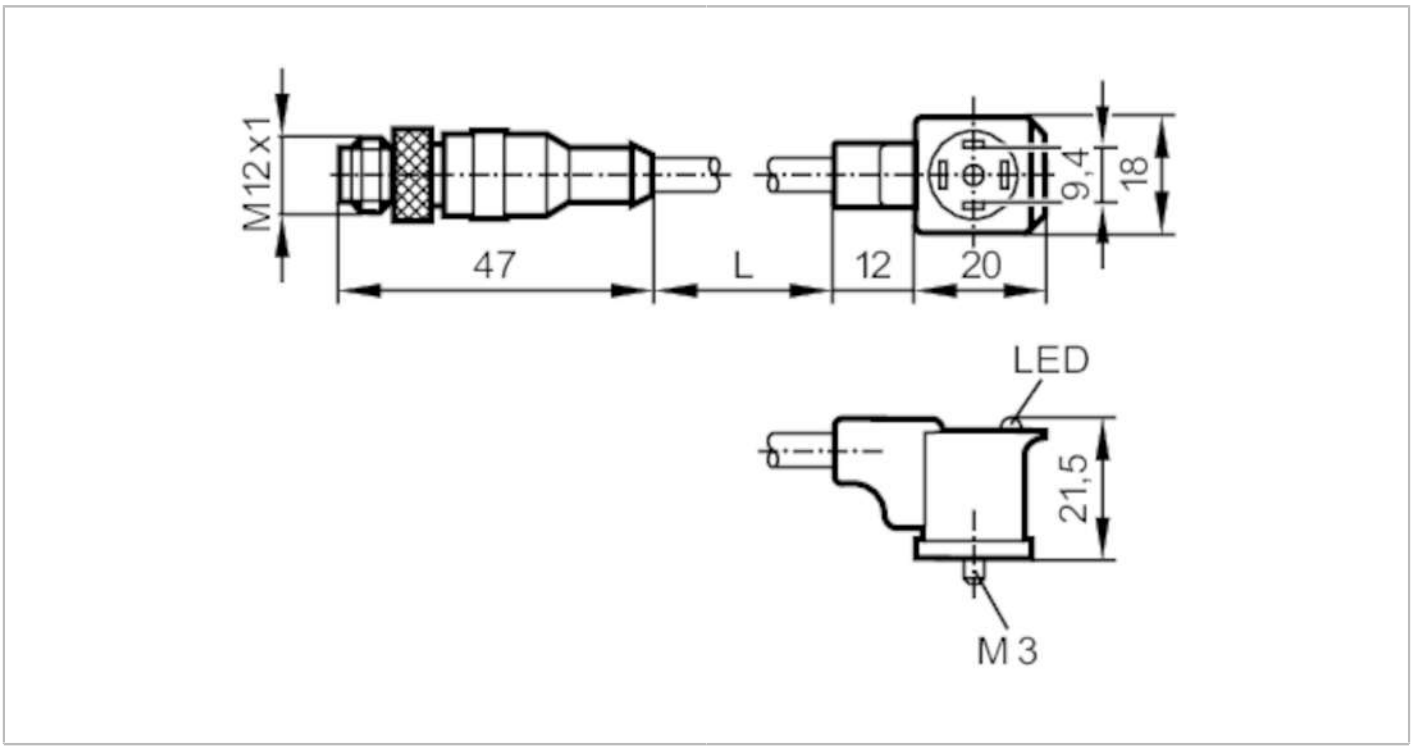

Application			
Special feature		Free from silicone; Halogen-free; Gold-plated contacts	
Free from silicone		yes	
Electrical data			
Operating voltage	[V]	< 24 AC/DC	
Overvoltage protection		yes; (VDR)	
Max. current load total	[A]	3	
Operating conditions			
Ambient temperature	[°C]	-25...80	
Protection		IP 67	
Mechanical data			
Weight	[g]	44.5	
Materials		PUR	
Moulded-body material		PUR	
Material nut		brass, nickel-plated	
Displays / operating elements			
Display		switching status	1 x LED, yellow
Accessories			
Items supplied		screw	
		panel for labelling	
Remarks			
Pack quantity		1 pcs.	

E11436

Jumper cable with valve plug

VVSAC031MSS00,3H03STGH030MSS

Electrical connection - plug

Connector: 1 x M12, straight; coding: A; Moulded body: PUR; Locking: brass, nickel-plated; Contacts: gold-plated; Tightening torque: 0.7...0.9 Nm

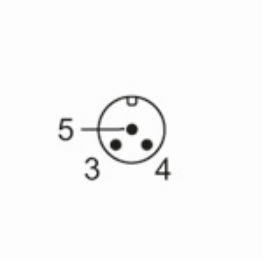

Electrical connection

Cable: 0.3 m, PUR, Halogen-free, black, Ø 5 mm; 3 x 0.5 mm² (42 x Ø 0.1 mm)

Connection

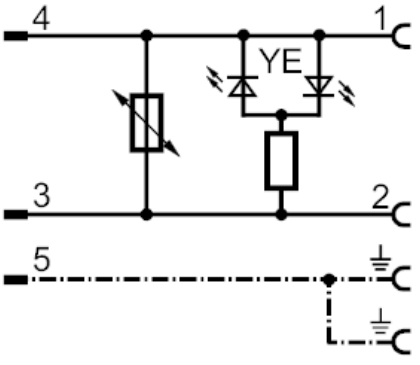

Electrical connection - socket

Connector: 1 x valve type C industrial standard, angled; Moulded body: PUR; Locking: brass, nickel-plated; Contacts: nickel-plated brass; Tightening torque: 0.7...0.9 Nm

