Brand of NTN corporation

Technical data

USEHE207

Bearing units



Grey cast housing, radial insert ball bearing with socket set screws, single lip seal

KIT CONTENT

US207G2, EHE207

VISUAL (S)

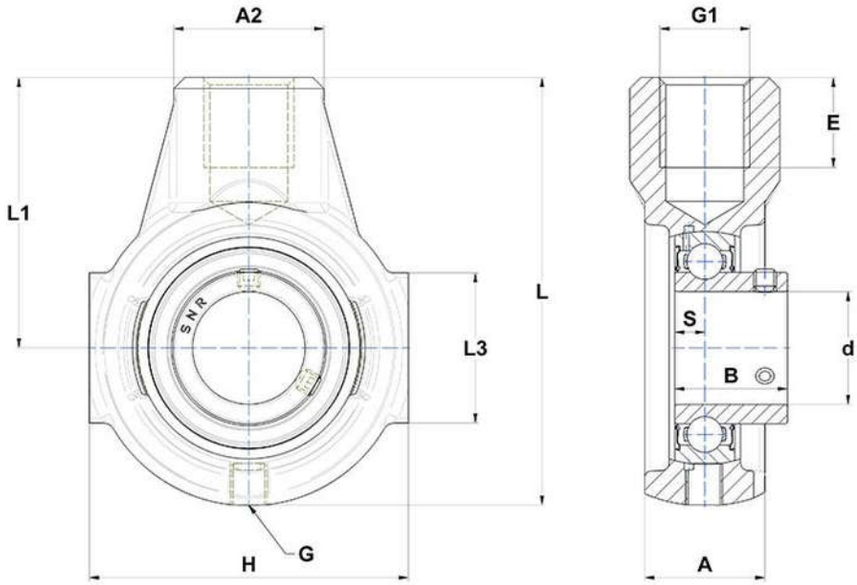

PRODUCT DEFINITION

Brand	SNR
A - Housing width	32 mm
A2	40 mm
B - Width of Inner Ring	32 mm
d - Shaft diameter	35 mm
E - Mounting hole thread depth	24 mm

NTN Europe
1 rue des Usines · BP 2017 · 74010 Annecy Cedex · France · Tel. +33 (0)4 50 65 30 00
S.A. au capital de 322 639 919 € · RCS ANNECY B 325 821 072 · Id. Fiscale : FR 48 325 821 072
SIRET 325 821 072 00015 · Code APE 2815 Z · Code NACE 28.15

PRODUCT DEFINITION	
G - Grease fitting	R1/8"
G1 - Thread size	M24
H - Housing length, width or diameter	90 mm
L - Housing length	122 mm
L1 - Distance attachment end face to bearing centerline	76 mm
L3 - Length of guidance slot/face	40 mm
S - Distance front side/bearing centre	8,5 mm

PRODUCT PERFORMANCE	
C - Dynamic load rating	25700000 mN
C0 - Static load rating	15200000 mN
Operating temperature min.	253,15 °K
Operating temperature max.	373,15 °K

OTHER FEATURES	
Mass	1,12 kg
Recommended tightening torque for set screw	5.5 N-m