HAMMOND MANUFACTURING®

www.hammondmfg.com

158M

D.C. Reactors or Filter Chokes
Low to Medium Current

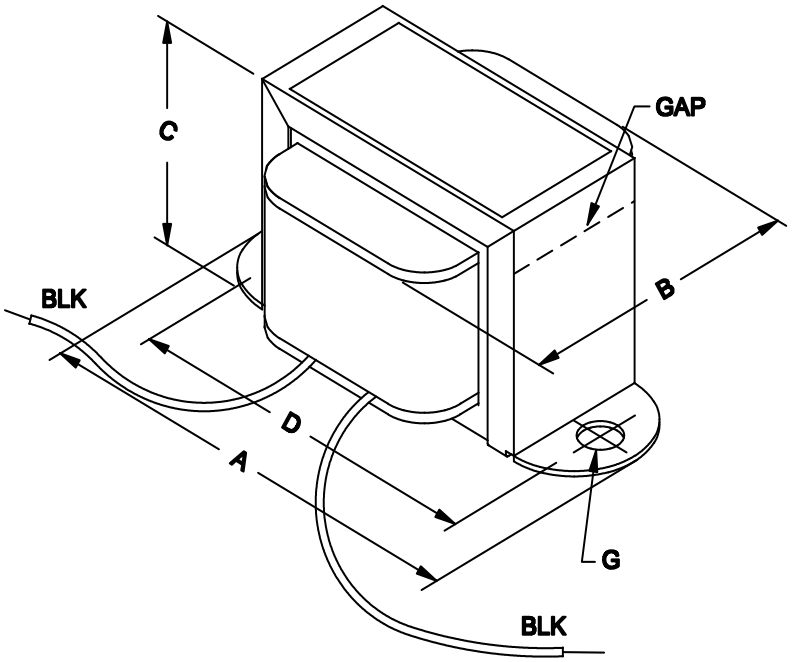

Features

- Economical “open bracket” - channel mount.
- Tolerance of 15% on both inductance & resistance.
- Inductances measured at rated D.C. current.
- Minimum 5” long leads.
- Units will exhibit less inductance at slightly higher currents or more inductance at lower currents.
- Perfect for high voltage power supply filtering.
- Every unit is Hipot tested (100%) at 1,500 VAC
- Units are vacuum impregnated with polyurethane varnish for quiet and long life operation.

Mechanical	
A	3.25" / 82.6 mm
B	2" / 50.8 mm
C	2" / 50.8 mm
D	2.81" / 71.4 mm
G	0.19" / 4.8 mm
Weight	1.25 lbs / 0.57 kg
Electrical	
Inductance (+/- 15%)	10H
D.C. Current	100 ma.
Resistance (+/- 15%)	195 ohms
Maximum Operating Volt (D.C.)	400V