bürkert
FLUID CONTROL SYSTEMS

# 2/2 or 3/2-way Solenoid Valve for aggressive media, G 1/4



- Pivoted armature valve with manual override
- Direct-acting with separating diaphragm
- Different circuit function available
- Suitable for aggressive media
- Plastic body in PP or PVDF

Type 0124 can be combined with...

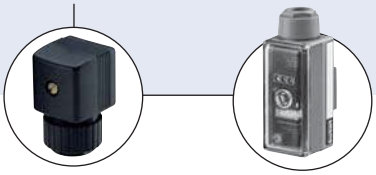

**Type 2508**
Cable plug

**Type 1078**
Timer unit

The Type 0124 is a direct-acting 2/2 or 3/2-way pivoted armature solenoid valve. Deliverable in many circuit functions for opening, closing, dosing, mixing and distribution. The magnetic system and the media chamber are separated from one another by a separating diaphragm system.

**Circuit function A**

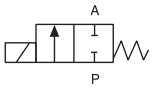


2/2-way valve NC

**Circuit function C**




3/2-way valve NC

**Circuit function E**

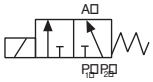


3/2-way mixer valve

**Circuit function F**

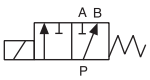


3/2-way distribution valve

| Technical data | |
|---|---|
| **Orifice** | DN 3.0 - 5.0 mm |
| **Body and seat material** | PP, PVDF |
| **Coil material** | Epoxy |
| **Coil insulation class** | H |
| **Seal material** | EPDM, FKM<br>NBR and FFKM on request |
| **Media**<br>EPDM<br><br>FKM | <br>Alkalis, acids up to medium concentrations, alkaline washing and bleaching lyes,<br>Oxidising acids and substances, oils, salt solutions, waste gases |
| **Media temperature**<br>EPDM<br>FKM | <br>– 30 to +80 °C<br>0 to +80 °C |
| **Ambient temperature** | Max. +55 °C |
| **Voltage tolerance** | ±10% |
| **Duty cycle**<br>Intermittent operation<br>Continuous operation | <br>40% ED (30 min) with 8 W version<br>100% ED with 5 W version (on request) |
| **Electrical connection** | Tag connector acc. to DIN EN 175301-803 Form A (previously DIN 43650) for cable plug Type 2508 (supplied as standard) |
| **Protection class** | IP 65 with cable plug |
| **Installation** | As required, preferably with actuator upright |

DTS 1000010905 EN Version: D Status: RL (released | freigegeben | validé) printed: 29.08.2013

## Technical data

| Inrush | Hold | warm/cold | Weight |
|---|---|---|---|
| AC [VA] | AC [VA/W] | DC [W] | kg |
| 30 | 15/8 | 8/11 | 0.4 |

| Orifice | Response times | | | |
|---|---|---|---|---|
| | AC | | DC | |
| [mm] | Opening [ms] | Closing [ms] | Opening [ms] | Closing [ms] |
| 2-4 | 8-15 | 8-15 | 10-20 | 10-20 |

The springs of each valve are set up for a specific circuit function. When using them in other circuit functions, the permissible operating pressure changes according to the following table.

**Response times [ms]:**
Measured at valve outlet at 6 bar and +20 °C
***Opening***: pressure build-up 0 to 90%, ***closing***: pressure relief 100 to 10%

| Circuit function | Max. operating pressure [bar] when using the valve in a new circuit function | | | | | | | | | | | |
|---|---|---|---|---|---|---|---|---|---|---|---|---|
| | Orifice 3.0 | | | | | | Orifice 4.0 | | | | | |
| | A | B | C | D | E | F | A | B | C | D | E | F |
| C | 10 | 1 | 10 | 1 | 1 | 10 | 5 | 0.8 | 5 | 0.8 | 0.8 | 5 |
| D | 6 | 6 | 6 | 6 | 6 | 3 | 3 | 3 | 3 | 3 | 3 | 3 |
| F | 5 | 1 | 6 | 1 | 1 | 10 | 4 | 1 | 4 | 1 | 1 | 4 |

## Materials

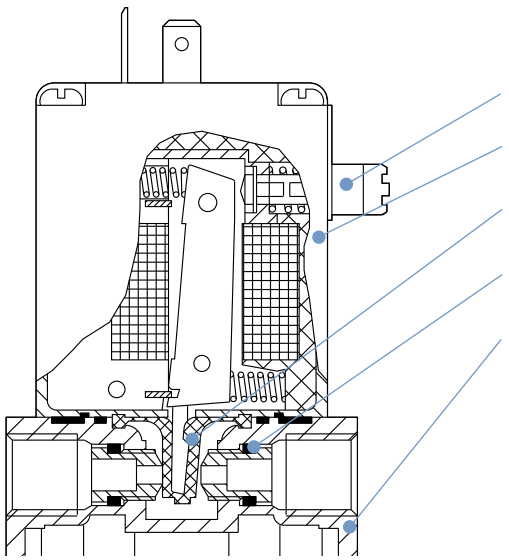


DTS 1000010905 EN Version: D Status: RL (released | freigegeben | validé) printed: 29.08.2013

## Ordering chart for valves (other versions on request)

| Circuit function | Port connection | Orifice [mm] | Kv value water [m³/h] | Pressure range [bar] | Voltage/ frequency [V/Hz] | Item no. Seal material FKM | Item no. Seal material EPDM |
|---|---|---|---|---|---|---|---|
| **All valves body material PP, manual override and cable plug, different seal materials** | | | | | | | |
| **A** | G 1/4 | 3.0 | 0.25 | 0 - 8 | 024/DC | 018 410 | 067 214 |
| | | | | 0 - 10 | 24/50 | 088 496 | 022 105 |
| | | | | | 230/50 | 045 653 | 062 398 |
| | G 1/4 | 4.0 | 0.30 | 0 - 4 | 024/DC | 062 695 | 021 660 |
| | | | | 0 - 5 | 024/50 | 043 005 | 067 731 |
| | | | | | 110/50 | 087 029 | – |
| | | | | | 230/50 | 063 116 | 063 118 |
| | G 1/4 | 5.0 | 0.40 | 0 - 3 | 024/DC | 062 624 | 061 321 |
| | | | | 0 - 4.5 | 024/50 | 067 007 | 054 261 |
| | | | | | 110/50 | – | 088 468 |
| | | | | | 230/50 | 022 619 | 049 969 |
| **C** | G 1/4 | 4.0 | 0.30 | 0 - 5 | 024/50 | 088 420 | – |
| | | | | | 230/50 | – | 063 625 |
| **E** | G 1/4 | 3.0 | 0.25 | 0 - 4 | 024/DC | 069 917 | 078 556 |
| | | | | 0 - 6 | 024/50 | 066 230 | – |
| | | | | | 230/50 | 022 294 | 078 559 |
| | G 1/4 | 4.0 | 0.30 | 0 - 2 | 024/DC | 061 077 | 067 160 |
| | | | | 0 - 3 | 024/50 | 086 921 | 044 693 |
| | | | | | 230/50 | 053 406 | 066 033 |
| **F** | G 1/4 | 4.0 | 0.30 | 0 - 4 | 024/DC | 020 528 | – |
| | | | | 0 - 5 | 230/50 | – | 066 032 |
| **All valves with body material PVDF, manual override and cable plug, seal material FKM** | | | | | | | |
| **A** | G 1/4 | 3.0 | 0.25 | 0 - 8 | 024/DC | 018 188 | – |
| | | | | 0 - 10 | 024/50 | 020 286 | – |
| | | | | | 110/50 | 078 784 | – |
| | | | | | 230/50 | 069 006 | – |
| | G 1/4 | 4.0 | 0.30 | 0 - 4 | 024/DC | 023 472 | – |
| | | | | 0 - 5 | 024/50 | 069 079 | – |
| | | | | | 230/50 | 087 837 | – |
| | G 1/4 | 5.0 | 0.40 | 0 - 3 | 024/DC | 064 512 | – |
| | | | | 0 - 4.5 | 230/50 | 063 786 | – |
| **C** | G 1/4 | 4.0 | 0.30 | 0 - 4 | 024/DC | 055 788 | – |
| | | | | 0 - 5 | 230/50 | 019 078 | – |
| **E** | G 1/4 | 4.0 | 0.30 | 0 - 2 | 024/DC | 022 340 | – |
| | | | | 0 - 3 | 024/50 | 020 550 | – |
| | | | | | 230/50 | 085 599 | – |

**A** 2/2-way valve NC

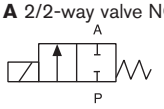


**C** 3/2-way valve NC

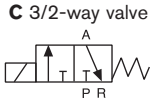


**E** 3/2-way mixer valve

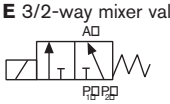


**F** 3/2-way distribution valve

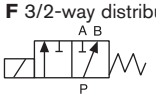


### Further versions on request

**Approvals**
UR, CSA, ATEX

**Voltage**
Non-standard voltages

**Pressure**
Vacuum version

**Port Connection**
NPT 1/4, sub-base

**Materials**
Seal material - FFKM

**Additional**
Optical or electrical feedback

DTS 1000010905 EN Version: D Status: RL (released | freigegeben | validé) printed: 29.08.2013

## Dimensions [mm]

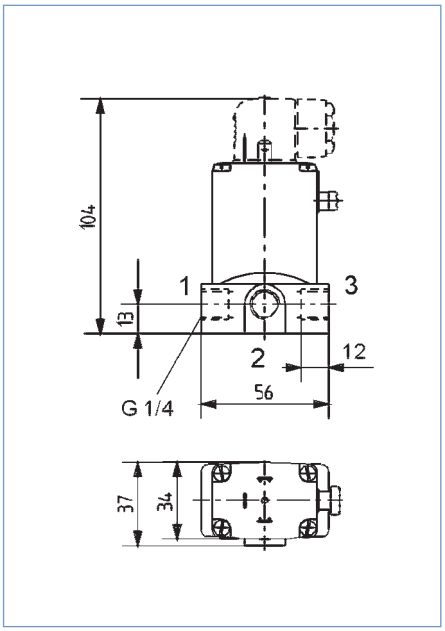


The ports are marked with 1, 2 and 3 as indicated in the configuration table, depending on the circuit function.

### Possible port configurations

| Circuit function | 1 | 2 | 3 |
|---|---|---|---|
| **A**[1)] | A | - | P |
| **C** | P | A | R |
| **E** | P1 | A | P2 |
| **F** | A | P | B |

[1)] Type 0124 has no middle connection in circuit function A.

DTS 1000010905 EN Version: D Status: RL (released | freigegeben | validé) printed: 29.08.2013


© Christian Bürkert GmbH & Co. KG