DATASHEET
Contactors



Main Features

Reference	: CWC0
Product code	: 12683688
Rated current Ie AC-3 (Ue ≤ 440 V)	: 9 A
Main contacts (power)	: 4 NO
Auxiliary contacts	: No auxiliary contacts
Control voltage	: 230V 50/60Hz
Type of terminal	: Screw

Basic data

Rated utilization voltage Ue		
- IEC / UL		: 690 V / 600 V
Isolation voltage Ui (pollution degree 3)		
- IEC / UL		: 690 V / 600 V
Rated impulse withstand voltage Uimp		: 4 kV
- Frequency limits [1]		: 25 Hz ... 400 Hz
- Mechanical lifespan		
AC-operated contactor		: 10 million
DC-operated contactor		: 12 million
Electrical lifespan - Ie AC3		: 1,3 million
Number of coil terminals (AC Coil)		
AC coil contactors		: 2
- DC coil contactors		: 2
Resistance to vibration (IEC 60068-2-6)		
opened contactor		: 2 g
closed contactor		: 3 g
Resistance to mechanical shock (½ sinusoid = 11ms)		
opened contactor		: 6 g
closed contactor		: 6 g
Installation		: DIN 35 mm (EN 50022)
Degree of protection (IEC 60529)		
Main circuit		: IP20
Control circuit		: IP20

Alternating current - control circuit

Isolation voltage Ui (pollution degree 3)		: 690 V / 600 V
- IEC / UL		
Standard voltages for 50/60 Hz		: 12...660 V
Comand circuit operation limits		
- control circuit 60 Hz	- pick up	: 0,5...0,8xUs
	- drop out	: 0,2...0,6xUs
- control circuit 50 Hz	- pick up	: 0,5...0,8xUs
	- drop out	: 0,2...0,6xUs
- Average coil consumption		
- operating at 60 Hz	- closed magnetic circuit	: 2...3 VA
	- power factor (cos φ)	: 0.28
	- Thermal power dissipated	: 1 W
	- closing the magnetic circuit	: 30 VA
- operating at 50 Hz	- closed magnetic circuit	: 2.3...3.5 VA
	- power factor (cos φ)	: 0.28
	- Thermal power dissipated	: 1 W
	- closing the magnetic circuit	: 35 VA
Average time of operation		
- closing the NO contacts		: 8...20 ms
- opening the NO contacts		: 5...15 ms

Direct current - command circuit

- IEC / UL	
Standard voltages	:
Comand circuit operation limits	
- pick up	:
- drop out	:
Average consumption	
- closed magnetic circuit	:
- closing the magnetic circuit	:
Thermal power dissipated	:
Average time of operation	
- closing the NO contacts	:
- opening the NO contacts	:

Main contacts (power)

Rated utilization current Ie	
- AC-3 (Ue ≤ 440 V)	: 9 A

- AC-4 (Ue ≤ 440 V) : 3,5 A
- AC-1 (θ ≤ 55 °C, Ue ≤ 690 V) : 20 A

Rated utilization voltage Ue
- IEC / UL : 690 V / 600 V

Number of main contacts : 4 NO
Establishment capacity (IEC 60947) : 90 A
Breaking capacity (IEC/EN 60947)
- Ue≤400V : 72 A
- Ue=500V : 72 A
- Ue=690V : 54 A

Temporary permissible current (without previously current conduction during 15 min at θ ≤ 40 ºC)
- 1 sec : 250 A
- 10 sec : 95 A
- 10 sec : 95 A
- 1 min :
- 10 min : Not available

Protection against short circuit of the contacts main fuse (gL/gG)
- @600V - UL/CSA : 5 kA
- type 1 coordenation : 35 A
- type 2 coordenation : 20 A

Average power dissipated per pole
AC-1 (θ ≤ 55 °C, Ue ≤ 690 V) : 2,4 W
AC-3 (Ue ≤ 440 V) : 0,5 W

Utilization category AC-3

Rated current Ie (θ ≤ 55 ºC)
- Ue ≤ 440V : 9 A
- Ue ≤ 500V : 7,5 A
- Ue ≤ 690V : 5,5 A

Maximum percentage (600 ops./h) : 100 %

Orientative values of power (IEC)-three-phase induction motors (50/60 Hz)-IV poles-1800 rpm		
Voltage	kW	cv or HP
220 / 240 V	2,2 kW	3 HP
380 / 400 V	4 kW	5,4 HP
415 / 440 V	4,5 kW	6 HP
500 V	4,5 kW	6 HP
660 / 690 V	4 kW	5,4 HP

Orientative values of power (UL)		
Voltage	1 Phase	3 Phase
120 V	0.3	1
200 V	Not applicable	Not available
208 V	1	2
240 V	1	3
480 V	Not available	5
600 V	Not available	7.5

Utilization category AC-4

Rated current Ie (θ ≤ 55 ºC)
- Ue ≤ 440V : 3,5 A
- Ue ≤ 500V : Not available
- Ue ≤ 690V : Not available

Orientative values of power (IEC)-three-phase induction motors (50/60 Hz)-IV poles-1800 rpm		
Voltage	kW	cv or HP
220 / 240 V	0,75 kW	1 HP
380 / 400 V	1,1 kW	1.5 HP
415 / 440 V	1,5 kW	2 HP
500 V	1,5 kW	2 HP
660 / 690 V	1,5 kW	2 HP

Utilization category AC-1 (3 P/NA)

Maximum percentage (600 ops./h) : 1

Maximum power operation θ ≤ 55ºC (three resistors)	
Voltage	Power
220 / 240 V	7,5 kW
380 / 400 V	13 kW
415 / 440 V	14.5 kW
500 V	16,5 kW
660 / 690 V	22 kW

Auxiliary contacts

Standards compliance : Not available
Insulation voltage Ui
- IEC / UL : Not available / Not available

Rated utilization voltage Ue
- IEC / UL : Not available / Not available
Conventional thermal current Ith (θ ≤ 55ºC) : Not available
Rated current Ie - IEC 60947-5-1/AC-15
- 220 / 240 V : Not available
- 380 / 440 V : Not available
- 500 V : Not available
- 660 / 690 V : Not available
Rated current Ie - IEC 60947-5-1/DC-13
- 24 V : Not available
- 48 V : Not available
- 110 V : Not available
- 220 V : Not available
- 440 V : Not available
Establishment capacity - (AC-15 and Ue ≤ 690V 50/60Hz) : Not available
Interruption capacity - (AC-15 and Ue ≤ 400V 50/60Hz) : Not available
Protection against short circuit of the contacts main fuse (gL/gG) : Not available
Control circuit reliability : Not available
Electrical lifespan : Not available
Mechanical lifespan : Not available
Non-overlapping time between NO and NC contacts : Not available
Impedance per pole : Not available

Connection

Main contacts
Type of the screw : M3 Flat/Phillips
Section of the conductors

Type of the conductor	Section (IEC)	Section (UL)
Rigid cable	1 x 0,5...2,5 mm²	1 x
	2 x 0,5...2,5 mm²	2 x
Flexible cable without terminal	1 x 0,75...2,5 mm²	1 x
	2 x 0,75...2,5 mm²	2 x
Flexible cable with terminal	1 x 0,5...2,5 mm²	1 x
	2 x 0,5...1,5 mm²	2 x

Tightening torque (IEC/UL) : 1.1 Nm / 10 lb.in
Control circuit
Type of the screw : M3 Flat/Phillips
Section of the conductors

Type of the conductor	Section (IEC)	Section (UL)
Rigid cable	1 x 0,5...2,5 mm²	1 x
	2 x 0,5...2,5 mm²	2 x
Flexible cable without terminal	1 x 0,75...2,5 mm²	1 x
	2 x 0,75...2,5 mm²	2 x
Flexible cable with terminal	1 x 0,5...2,5 mm²	1 x
	2 x 0,5...1,5 mm²	2 x

Tightening torque (IEC/UL) : 1,1 Nm / 10 lb.in

Direct current application

Utilization category DC-1 (L/R ≤ 1 ms)

	Rated utilization current (Ie)			
	Pole(s) in series			
Voltage	1	2	3	4
Ue ≤ 24V	10 A	15 A	15 A	15 A
Ue ≤ 48V	10 A	15 A	15 A	15 A
Ue ≤ 60V	8 A	15 A	15 A	15 A
Ue ≤ 125V	4 A	8 A	12 A	15 A
Ue ≤ 220V	0,6 A	5 A	9 A	12 A
Ue ≤ 440V	0,2 A	0,6 A	3,5 A	8 A
Ue ≤ 600V	Not available	0,2 A	1 A	2 A

Utilization category DC-3 (L/R ≤ 2.5 ms)

	Rated utilization current (Ie)			
	Pole(s) in series			
Voltage	1	2	3	4
Ue ≤ 24V	9 A	12 A	15 A	15 A
Ue ≤ 48V	8 A	12 A	15 A	15 A
Ue ≤ 60V	5 A	10 A	14 A	15 A
Ue ≤ 125V	1,5 A	5,5 A	10 A	14 A
Ue ≤ 220V	0,4 A	1,5 A	7 A	11 A
Ue ≤ 440V	Not available	0,2 A	1 A	3 A
Ue ≤ 600V	Not available	Not available	0,6 A	1,5 A

Operation category DC-5 (L/R ≤ 15ms)

	Rated utilization current (Ie)			
	Pole(s) in series			
Voltage	1	2	3	4
Ue ≤ 24V	8 A	12 A	15 A	15 A
Ue ≤ 48V	8 A	12 A	15 A	15 A
Ue ≤ 60V	5 A	10 A	14 A	15 A
Ue ≤ 125V	1,5 A	5,5 A	9 A	14 A
Ue ≤ 220V	0,4 A	0,7 A	2,5 A	9 A
Ue ≤ 440V	Not available	Not available	0,3 A	0,7 A
Ue ≤ 600V	Not available	Not available	Not available	0,2 A

Ambient temperature

Operation : -25 °C ... +55 °C
Storage : -55 °C ... +80 °C
Maximum altitude with no change of rated values [2] : 3000 m

Dimensions

Height : 58 mm (2.28 in)
Width : 45 mm (1.77 in)
Depth : 52 mm (2.05 in)
Weight : 194 g

Standards

IEC 60947-1
UL 508

Certifications

CE, UL, UL-NOM, IRAM and EAC

Notes

1) Values above 60 Hz should have current reduction;
2) For altitudes of 3000 to 4000 m (0.90 x 0.80 x Ie and Ui) and from 4000 to 5000 m (0.80 x 0.75 x Ie and Ui).

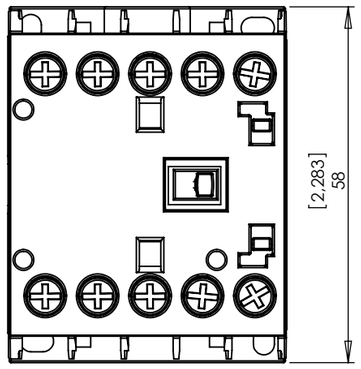

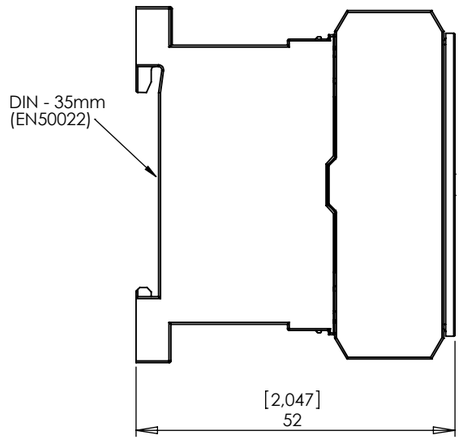

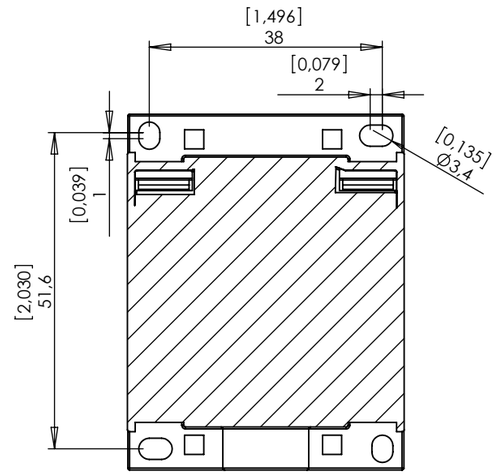

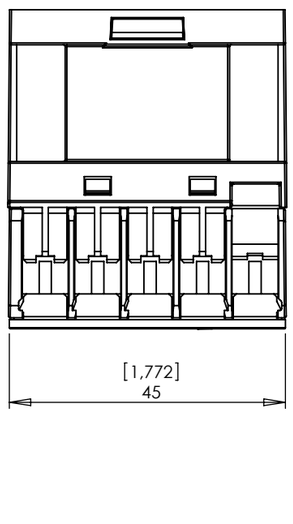

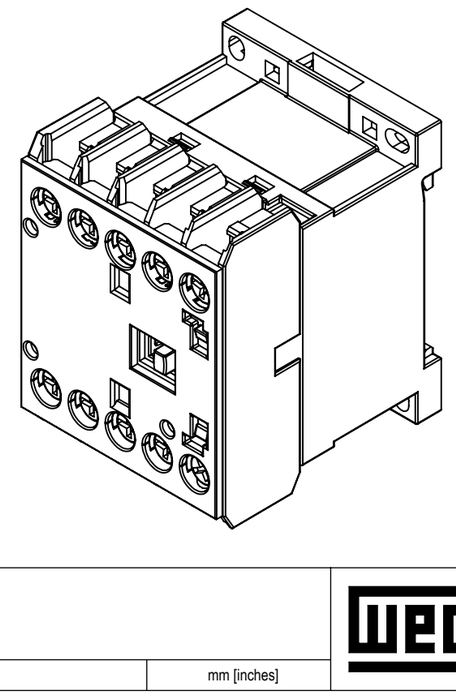

CWC07...16-CWCA0

24/02/2012	1 : 1	mm [inches]

A3

Sujeito a alteração sem aviso prévio. As informações contidas são valores de referência.
The values shown are subject to change without prior notice. The information is for reference only.

Los valores demostrados pueden ser cambiados sin aviso previo. La información és de referencia solamente.