PT5015

Pressure transmitter

PT-006-SEG14-A-ZVG/VE

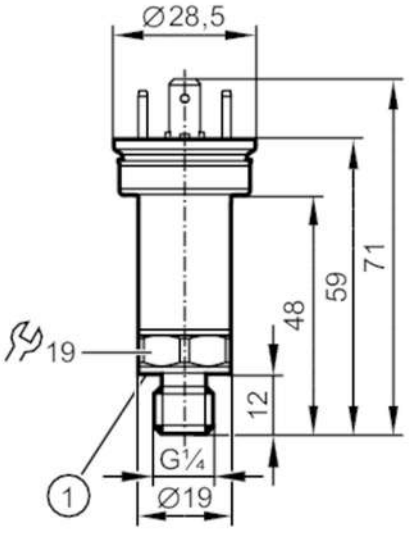

1 Sealing

Product characteristics				
Number of inputs and outputs	Number of analogue outputs: 1			
Measuring range	0...6 bar	0...87 psi	0...600 kPa	0...0.6 MPa
Process connection	threaded connection G 1/4 external thread (DIN EN ISO 1179-2)			
Application				
Measuring element	metallic thin film cell			
Application	for mobile applications; for industrial applications			
Media	liquids and gases			
Medium temperature [°C]	-40...125			
Min. bursting pressure	200 bar	2900 psi	20 MPa	
Pressure rating	15 bar	215 psi	1.5 MPa	
Note on pressure rating	static			
Vacuum resistance	-1000 mbar	-0.1 MPa		
Type of pressure	relative pressure			
Electrical data				
Operating voltage [V]	8...36 DC			
Min. insulation resistance [MΩ]	100; (500 V DC)			
Protection class	III			
Reverse polarity protection	yes			
Power-on delay time [s]	< 0.1			
Inputs / outputs				
Number of inputs and outputs	Number of analogue outputs: 1			
Outputs				
Output signal	analogue signal			
Number of analogue outputs	1			
Analogue current output [mA]	4...20			

PT5015

Pressure transmitter

PT-006-SEG14-A-ZVG/VE

Max. load	[Ω]	(Ub - 8 V) / 21,5 mA ; @8V= 0 Ω ; @12V max. 200 Ω: @24V max. 750 Ω			
Short-circuit proof		yes			
Overload protection		yes			
Measuring/setting range					
Measuring range		0...6 bar	0...87 psi	0...600 kPa	0...0.6 MPa
Accuracy / deviations					
Repeatability	[% of the span]	< ± 0,05; (with temperature fluctuations < 10 K)			
Characteristics deviation	[% of the span]	< ± 0,5; (incl. drift when overtightened, zero point and span error, non-linearity, hysteresis)			
Linearity deviation	[% of the span]	< ± 0,1 (BFSL) / < ± 0,2 (LS)			
Hysteresis deviation	[% of the span]	< ± 0,2			
Long-term stability	[% of the span]	< ± 0,1; (per 6 months)			
Temperature coefficient zero point	[% of the span / 10 K]	< ± 0,1 (0...80 °C); < ± 0,2 (-40...0 °C / 80...125 °C)			
Temperature coefficient span	[% of the span / 10 K]	< ± 0,1 (0...80 °C); < ± 0,2 (-40...0 °C / 80...125 °C)			
Response times					
Step response time analogue output	[ms]	2			
Operating conditions					
Ambient temperature	[°C]	-40...100			
Storage temperature	[°C]	-40...100			
Protection		IP 67			
Tests / approvals					
EMC		Compliant with ECE R 10, rev. 5	(E1 compliant)		
		DIN EN ISO 13766-1 : 2018	earthworks and construction machines		
		DIN EN ISO 14982 : 2009	agricultural and forestry machines		
		ISO 11452-2	100 V/m		
		ISO 7637-2 : 2011 pulse 1	Test severity III. function state C		
		ISO 7637-2 : 2011 pulse 2b	test severity IV. function state C		
		DIN EN 61326-1			
Shock resistance		DIN EN 60068-2-27	500 g (1 ms)		
Vibration resistance		DIN EN 60068-2-6	20 g (10...2000 Hz)		
MTTF	[years]	715			
UL approval		UL Approval no.	J032		
		File number UL	E174189		
Pressure Equipment Directive		Sound engineering practice; can be used for group 2 fluids; group 1 fluids on request			
Mechanical data					
Weight	[g]	67			
Housing		cylindrical			
Dimensions	[mm]	Ø 19 / L = 71			
Materials		stainless steel (630/1.4542/17-4 PH); stainless steel (316L/1.4404); PPS			

PT5015

Pressure transmitter

PT-006-SEG14-A-ZVG/VE

Materials (wetted parts)		stainless steel (630/1.4542/17-4 PH); stainless steel (303/1.4305)
Min. pressure cycles		60 million; (at 1.2 times nominal pressure)
Tightening torque	[Nm]	25...35; (recommended tightening torque; depends on lubrication, seal and pressure rating)
Process connection		threaded connection G 1/4 external thread (DIN EN ISO 1179-2)
Process connection sealing		FKM (DIN EN ISO 1179-2)
Restrictor element integrated		yes

Remarks

Remarks	BFSL = Best Fit Straight Line
	LS = limit value setting
Pack quantity	1 pcs.

Electrical connection

Connector: 1 x valve plug type A DIN (EN175301-803-A)



Connection

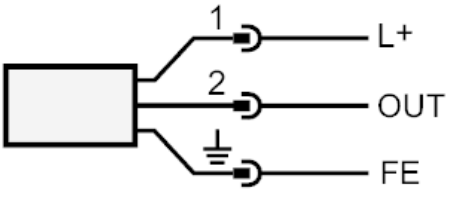

OUT	analogue output
FE	functional earth

PT5015

Pressure transmitter

PT-006-SEG14-A-ZVG/VE

Diagrams and graphs

characteristic load curve of current output

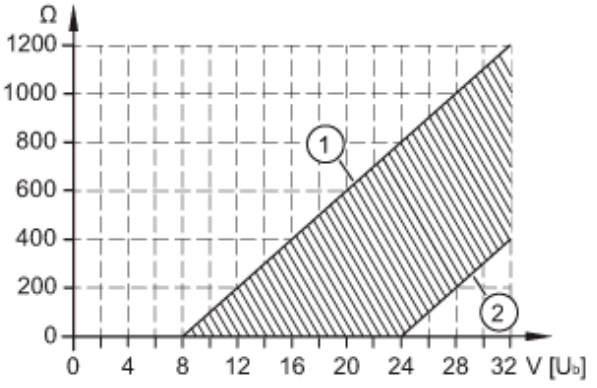

1: Max. load

2: min. load