WIRING DIAGRAM

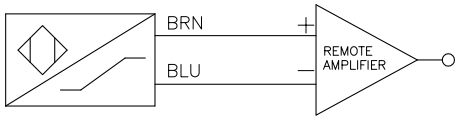

OUTPUT: Y0X

LOCKNUT LN–M12

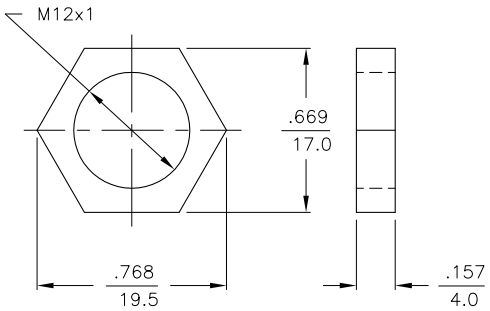

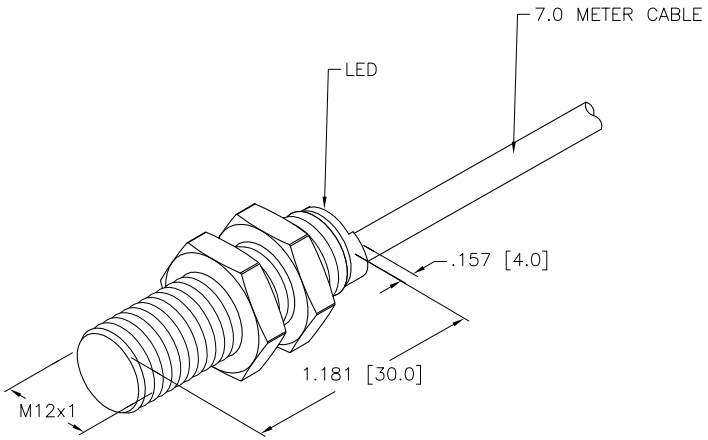

SPECIFICATIONS

RATED OPERATING DISTANCE	2mm [.079"]
MOUNTING MODE	FLUSH
MIN. REPEAT ACCURACY	≤ 2%
TEMPERATURE DRIFT	≤ ±10%
HYSTERESIS	1–10%
AMBIENT TEMPERATURE	–25°C to +70°C (–13°F to +158°F)
OUTPUT FUNCTION	2–WIRE, NAMUR
MAX. SWITCHING FREQUENCY	≤ 3.0 kHz
VOLTAGE	NOM. 8.2 VDC
NON–ACTUATED CURRENT CONSUMPTION	≥ 2.1 mA
ACTUATED CURRENT CONSUMPTION	≤ 1.2 mA
APPROVAL ACCORDING TO:	KEMA 02 ATEX 1090X
INTERNAL INDUCTIVITY (L_i)/CAPACITIVITY (C_i)	150 nF/150 µH Values for Pre–assembled Cables up to 30 Meters
MARKING OF DEVICE	⟨Ex⟩ II 2 G EEx ia IIC T6 (max. U_i =20 V, I_i = 60 mA, P_i =200 mW)
HOUSING MATERIAL	BRASS, CHROME–PLATED
ACTIVE FACE MATERIAL	PLASTIC, PA12–GF30
END CAP MATERIAL	PLASTIC, TROGAMID T
CABLE	ø5.2, PVC
VIBRATION RESISTANCE	55 Hz (IN ALL 3 PLANES)
SHOCK RESISTANCE	30 g, 11 ms
DEGREE OF PROTECTION	IP 67
SWITCHING STATUS INDICATION	LED: YELLOW

SOURCE DRAWING - FOR REFERENCE ONLY

REV	DESCRIPTION	BY	DATE	ECO NO.
A	DRAWING RELEASE	RDS	01/27/12	

RELATED DOCUMENTS
1.
2.
3.
4.

3RD ANGLE PROJECTION

THIS DRAWING IS CONFIDENTIAL AND THE PROPERTY OF TURCK INC. USE OF THIS DOCUMENT WITHOUT WRITTEN PERMISSION IS PROHIBITED.

TURCK INC
High Technology Sensors and Automation Controls
3000 CAMPUS DRIVE
MINNEAPOLIS, MN 55441
1–800–544–7769
(763) 553–7300
(763) 553–0708 fax
turck.com

MATERIAL: SEE SPECIFICATIONS

FINISH: SEE SPECIFICATIONS

ALL DIMENSIONS DISPLAYED ON THIS DRAWING ARE FOR REFERENCE ONLY

CONTACT TURCK FOR MORE INFORMATION

DRFT: RDS | DATE: 01/27/12

APVD: J.M. | SCALE: 1=1.0

UNIT OF MEASUREMENT
INCH [MILLIMETER]
DO NOT SCALE THIS DRAWING

DESCRIPTION: BI 2–G12–Y0X 7M

IDENTIFICATION NO.: T4010097 | REV: A

FILE: T4010097 | SHEET 1 OF 1

Approved 01/27/2012, work order #23698 by J.M.