PC series

Ergonomic pendant controllers •
custom configurable one-handed operation



DISTINCTIVE FEATURES

Analog and USB output options

Lightweight one-handed operation

Configured to order

Standard configuration with APEM TS Thumbstick and IP series pushbutton



ENVIRONMENTAL SPECIFICATIONS

- Operating Temperature: -40 °C to +85 °C (-40 °F to +185 °F)
- Storage Temperature: -40 °C to +85 °C (-40 °F to +185 °F)
- Environmental sealing: IP54

ELECTRICAL SPECIFICATIONS (WHEN CONFIGURATED WITH TS SERIES)

- Supply Voltage Range: 5.00 VDC ± 0.250 VDC
- Reverse Polarity Max: -10 VDC
- Overvoltage Max: 20 VDC
- Minimum load: 1 Ω
- Return to Center Voltage Tolerance: ± 200 mV initial

MECHANICAL SPECIFICATIONS

- Operating Force: 3 N ± 0.5 N (TS); 6 N ± 2N (IP)
- Maximum Vertical Load: 200 N (45 lbf) (TS)
- Maximum Horizontal Load: 150 N
- Mechanical Angle of Movement: ± 25°
- Expected Mechanical Life: 1 million lifecycles
- Mass/weight: 226.8 g (8 oz)
- Lever Action (centering): Spring

MATERIALS

- Body: Thermoplastic

SUPPORTED PROTOCOLS

- USB HID 1.1 game controller
- DirectX (Gaming Control)
- Uses standard Direct X HID drivers

The company reserves the right to change specifications without notice.

PC series

Ergonomic pendant controllers •
custom configurable one-handed operation

HANDLE DIMENSIONS



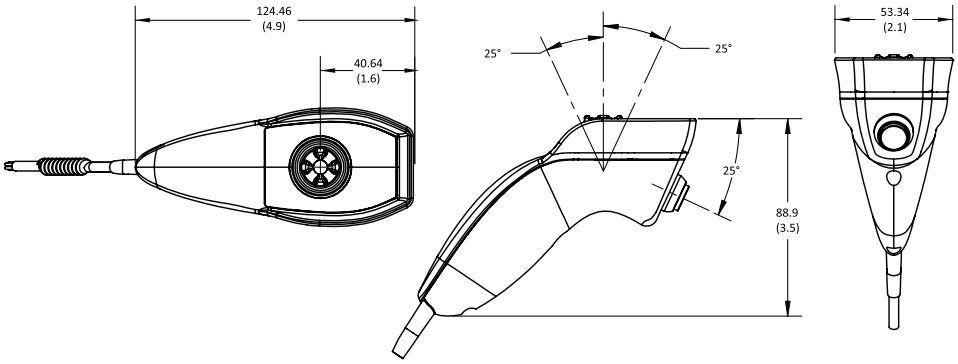

STANDARD CONFIGURATIONS

TWO AXIS TS AND MOMENTARY PUSHBUTTON WITH LED



PC 2430

Two axis thumbstick

TS1R2S00A

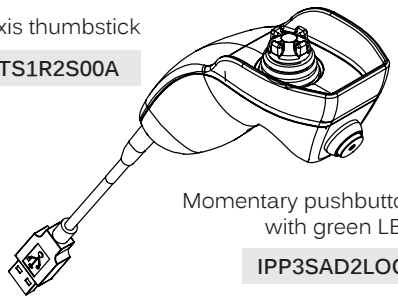

Momentary pushbutton
with green LED

IPP3SAD2LOG

OUTPUT - USB “Game Controller”

TWO AXIS TS AND MOMENTARY PUSHBUTTON



PC 2441

Two axis thumbstick

TS1R2S00A

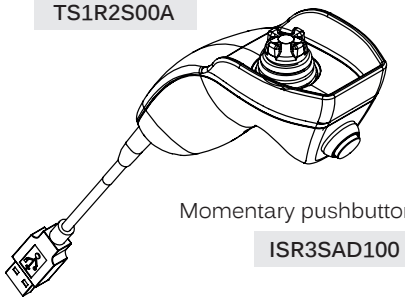

Momentary pushbutton

ISR3SAD100

OUTPUT - USB “Game Controller”

TWO AXIS TS WITH MOMENTARY PUSHBUTTON, COILED CABLE



PC 3566

Two axis thumbstick

TS1A1S00A

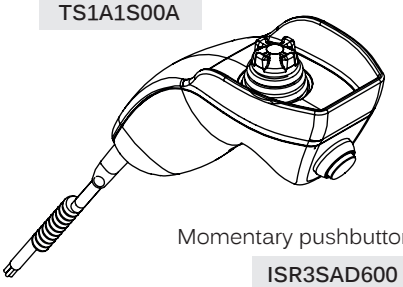

Momentary pushbutton

ISR3SAD600

OUTPUT - 0 V to 5 V
CABLE LENGTH (outstretched): 5' +/- 0.5'

WIRE COLOR	FUNCTION	DESCRIPTION
Red	Thumbstick	+5VDC
Black	Thumbstick	GND
Blue	Thumbstick	X axis
Yellow	Thumbstick	Y axis
Orange	Pushbutton	Switch one
White	Pushbutton	Common