30305 J2

Dimensions

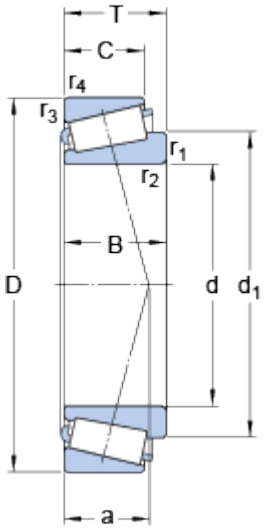

d		25	mm
D		62	mm
T		18.25	mm
d_1	≈	41.5	mm
B		17	mm
C		15	mm
$r_{1,2}$	min.	1.5	mm
$r_{3,4}$	min.	1.5	mm
a		12.779	mm

Abutment dimensions

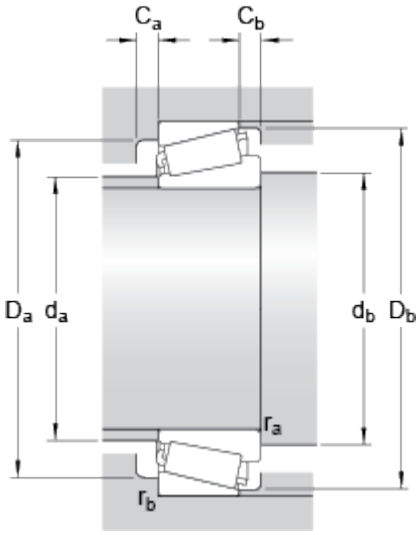

d_a	max.	34	mm
d_b	min.	32	mm
D_a	min.	54	mm
D_a	max.	55	mm
D_b	min.	57	mm
C_a	min.	2	mm
C_b	min.	3	mm
r_a	max.	1.5	mm
r_b	max.	1.5	mm

Calculation data

Basic dynamic load rating	C	44.6	kN
Basic static load rating	C_0	43	kN
Fatigue load limit	P_u	4.8	kN
Reference speed		9000	r/min
Limiting speed		12000	r/min
Calculation factor	e	0.3	
Calculation factor	Y	2	

Calculation factor	Y_0	1.1	

Mass

Mass bearing		0.258	kg