PN2296

Pressure sensor with display

PN-2,5-REN14-MFRKG/US/ /V

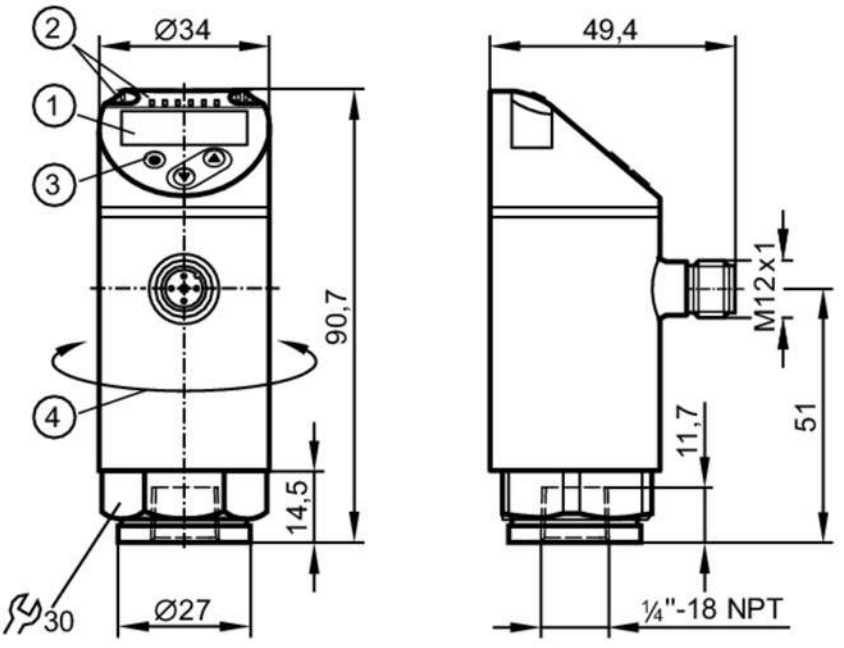

1 alphanumeric display 4-digit red/green
2 LEDs Display unit / switching status
3 programming button
4 upper part of the housing can be rotated 345°

Product characteristics				
Number of inputs and outputs	Number of digital outputs: 2; Number of analogue outputs: 1			
Measuring range	-0.125...2.5 bar	-125...2500 mbar	-1.8...36.25 psi	-12.5...250 kPa
Process connection	threaded connection 1/4" NPT internal thread			
Application				
Special feature	Gold-plated contacts			
Measuring element	ceramic-capacitive pressure measuring cell			
Application	for industrial applications			
Media	liquids and gases			
Medium temperature [°C]	-25...80			
Min. bursting pressure	50 bar	725 psi	5000 kPa	
Pressure rating	20 bar	290 psi	2000 kPa	
Vacuum resistance	-1000 mbar	-0.1 MPa		
Type of pressure	relative pressure			
MAWP (for applications according to CRN)	20 bar	290 psi	2000 kPa	
Electrical data				
Operating voltage [V]	18...30 DC; (to SELV/PELV)			
Current consumption [mA]	< 35			
Min. insulation resistance [MΩ]	100; (500 V DC)			
Protection class	III			

PN2296

Pressure sensor with display

PN-2,5-REN14-MFRKG/US/ /V

Reverse polarity protection		yes			
Power-on delay time	[s]	0.3			
Integrated watchdog		yes			
Inputs / outputs					
Number of inputs and outputs		Number of digital outputs: 2; Number of analogue outputs: 1			
Outputs					
Total number of outputs		2			
Output signal		switching signal; analogue signal; IO-Link; (configurable)			
Electrical design		PNP/NPN			
Number of digital outputs		2			
Output function		normally open / normally closed; (parameterisable)			
Max. voltage drop switching output DC	[V]	2			
Permanent current rating of switching output DC	[mA]	250			
Switching frequency DC	[Hz]	< 500			
Number of analogue outputs		1			
Analogue current output	[mA]	4...20; (scalable 1:5)			
Max. load	[Ω]	500			
Analogue voltage output	[V]	0...10; (scalable 1:5)			
Min. load resistance	[Ω]	2000			
Short-circuit protection		yes			
Type of short-circuit protection		pulsed			
Overload protection		yes			
Measuring/setting range					
Measuring range		-0.125...2.5 bar	-125...2500 mbar	-1.8...36.25 psi	-12.5...250 kPa
Analogue start point		-0.125...2 bar	-1.8...29 psi	-12.5...200 kPa	
Analogue end point		0.375...2.5 bar	5.45...36.25 psi	37.5...250 kPa	
Factory setting / CMPT = 2					
Set point SP		-0.11...2.5 bar	-1.6...36.25 psi	-11...250 kPa	
Reset point rP		-0.12...2.49 bar	-1.75...36.1 psi	-12...249 kPa	
Min. difference between SP and rP		0.015 bar	0.15 psi	1.5 kPa	
In steps of		0.005 bar	0.05 psi	0.5 kPa	
Status_B High Resolution / CMPT = 3					
Set point SP		-0.109...2.5 bar	-1.58...36.26 psi	-10.9...250 kPa	
Reset point rP		-0.12...2.49 bar	-1.73...36.11 psi	-12...249 kPa	
Min. difference between SP and rP		0.011 bar	0.15 psi	1.1 kPa	
In steps of		0.001 bar	0.01 psi	0.1 kPa	
Accuracy / deviations					
Switch point accuracy	[% of the span]	< ± 0,4; (Turn down 1:1)			
Repeatability	[% of the span]	< ± 0,1; (with temperature fluctuations < 10 K; Turn down 1:1)			
Characteristics deviation		< ± 0,25 (BFSL) / < ± 0,5 (LS); (Turn down 1:1; BFSL = Best Fit Straight Line; LS = limit value setting)			

PN2296

Pressure sensor with display

PN-2,5-REN14-MFRKG/US/ /V

[% of the span]	
Hysteresis deviation [% of the span]	< ± 0,1; (Turn down 1:1)
Long-term stability [% of the span]	< ± 0,05; (Turn down 1:1; per 6 months)
Temperature coefficient zero point [% of the span / 10 K]	< ± 0,2; (-0...80 °C)
Temperature coefficient span [% of the span / 10 K]	< ± 0,2; (-0...80 °C)
Notes on the accuracy / deviation	switch point accuracy, linearity error under DNV GL: < ± 1%: < ± 1%

Response times

Response time	[ms]	< 1.5
Delay time programmable dS, dr	[s]	0...50
Damping process value dAP	[s]	0...4
Damping for the analogue output dAA	[s]	0...4
Max. response time analogue output	[ms]	3

Software / programming

Parameter setting options	hysteresis / window; normally open / normally closed; switch-on/ switch-off delay; Damping; Display unit; current/voltage output

Interfaces

Communication interface	IO-Link
Transmission type	COM2 (38,4 kBaud)
IO-Link revision	1.1
SDCI standard	IEC 61131-9
SIO mode	yes
Required master port type	A; (when pin 2 not connected: B)

Supported DeviceIDs

Type of operation	DeviceID
Factory setting / CMPT = 2	474
Status_B High Resolution / CMPT = 3	990

Note	For further information please see the IODD PDF file under "Downloads"

Factory setting / CMPT = 2

Profiles	Smart Sensor: Process Data Variable; Device Identification, Device Diagnosis
Min. process cycle time [ms]	2.3
IO-Link resolution pressure [bar]	0.001

IO-Link process data (cyclical)

function	bit length
pressure	14
binary switching information	2

IO-Link functions (acyclical)	application specific tag

Status_B High Resolution / CMPT = 3

Profiles	Smart Sensor ED2: Digital Measuring Sensor (0x000A), Identification and Diagnosis (0x4000)
Min. process cycle time [ms]	3

PN2296

Pressure sensor with display

PN-2,5-REN14-MFRKG/US/ /V

IO-Link resolution pressure	[bar]	0.001	
IO-Link process data (cyclical)		**function**	**bit length**
		pressure	16
		device status	4
		binary switching information	2
IO-Link functions (acyclical)		application specific tag	
Operating conditions			
Ambient temperature	[°C]	-25...80	
Storage temperature	[°C]	-40...100	
Protection		IP 65; IP 67	
Tests / approvals			
EMC		DIN EN 61000-6-2	
		DIN EN 61000-6-3	
Shock resistance		DIN EN 60068-2-27	50 g (11 ms)
Vibration resistance		DIN EN 60068-2-6	20 g (10...2000 Hz)
MTTF	[years]	138	
UL approval		UL Approval no.	J012
Pressure Equipment Directive		Sound engineering practice; can be used for group 2 fluids; group 1 fluids on request	
Mechanical data			
Weight	[g]	222.5	
Housing		cylindrical	
Dimensions	[mm]	Ø 34 / L = 90.7	
Materials		stainless steel (316L/1.4404); PBT+PC-GF30; PBT-GF20; PC	
Materials (wetted parts)		stainless steel (316L/1.4404); Al2O3 (96%; ceramics); FKM	
Min. pressure cycles		100 million	
Tightening torque	[Nm]	> 50; (depends on lubrication, seal and pressure rating)	
Process connection		threaded connection 1/4" NPT internal thread	
Restrictor element integrated		no (can be retrofitted)	
Displays / operating elements			
Display		Display unit	3 x LED, green (bar, psi, kPa)
		switching status	2 x LED, yellow
		measured values	alphanumeric display, red/green 4-digit
Remarks			
Pack quantity		1 pcs.	

Electrical connection

Connector: 1 x M12; coding: A; Contacts: gold-plated



PN2296

Pressure sensor with display

PN-2,5-REN14-MFRKG/US/ /V

Connection

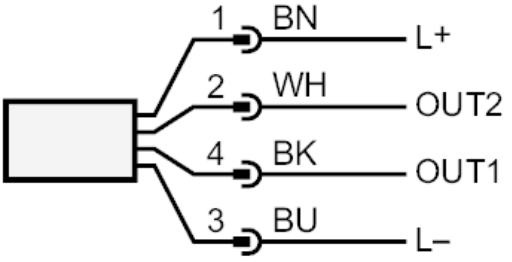

OUT1	switching output IO-Link
OUT2	switching output analogue output
	Core colours :
BK =	black
BN =	brown
BU =	blue
WH =	white