

The CXM has simple changeover contacts for use with a wide range of fire systems. The unit is supplied with both a glass and re-settable plastic element. The CXM is aimed at legacy systems.

Features

- Choice of glass or plastic elements
- Changeover contacts
- Potted waterproof option
- Flag on re-settable element

Benefits

- Select element depending on location and user preference
- Wide range of usages
- Suitable for outdoor use
- Quick, visable alarm identification

Technical Specification

Voltage	9 - 30Vdc
Current Rating	3A
Switching	SPCO
Element Type	Glass / Plastic (resettable)
Temperature	- 10°C to + 55°C - 25°C to + 70°C (WP)
Protection	IP24D, IP66 (WP)
Construction	ABS
Weight	0.19Kg, 0.22Kg (WP)
Colours	Red*

* Other colours available - minimum order required.

Dimensions

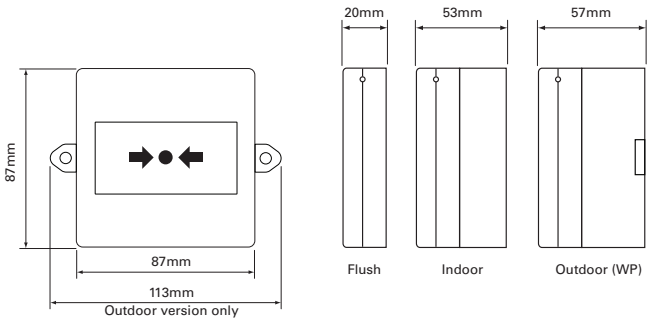

Call point range also available in different colours for non-fire applications



Catalogue Numbers

Reference	Cat No	Description
CXM/CO/GP/R/BB	4930010FUL-0048XC	Indoor call point, Red Body with back box, Glass element provided
CXM/CO/G/R/WP	4990073FULL-0122X	Weatherproof call point for outdoor use with IP66 backbox, Red body, Glass element provided.

For full list of part numbers, turn to page 83