Pulse counters, pneumatic

Pneumatic counters | **4 digits with, 6 digits with/without, 8 digits without reset** | **PMk14 / PMk16 / PMk18**



The pneumatic totalizers PMk14, PMk16 (with manual reset) and PMk18 (without reset) boast a robust construction.

They are ideal for use in harsh industrial environments, where the counters are directly driven by compressed air.

Characteristics

- Economical pneumatical totalizers.
- PMk14 and PMk16 with manual reset.
- PMk18 without reset.
- Counting via armature system with membrane.

Benefits

- No leakage.
- Also available with quick connection system.

Applications

Pneumatically operated devices and equipment.

Type series

Description	*reset*	*4 digits*	*6 digits*	*8 digits*
Panel mount with front bezel and 2 mounting holes	without	–	–	**PMk18.10**
	manual	**PMk14.11**	**PMk16.11**	–
Panel mount for clip mounting	without	–	–	**PMk18.20**
	manual	**PMk14.21**	**PMk16.21**	–

Accessories

		Type / size	Description		Order no.
Gasket counter		**39 x 40 mm [1.54 x 1.58]**	suitable for PMk14.11		**N511011**

Technical data

Pneumatic connections		M5 inner thread, 4 mm [0.16“] deep
Air purity		oil free or oil containing, the filter required must eliminate impurities > 40 µm
Mounting position		any
L-signal		1.5 ... 8 bar ±15 %
O-signal		≤ 0.15 bar
Max. safe pressure		9 bar (static)
Max. pulse frequency	at 1.5 bar at 2.5 bar at 6 bar at 8 bar	50 Hz 25 Hz 10 Hz 5 Hz depends on hose length
Pulse ratio		1:1 at max. pulse frequency, depending on the control
Max. Hose length (transmitter - counter, 1.5 bar)	at 50 Hz at 25 Hz at 10 Hz	0.3 m [11.81“] 0.4 m [15.75“] 0.5 m [19.67“]
Height of figures		4 mm [0.16“]
Color of figures		white on black

Technical data

Connection volume		0.19 m³
Operating temperature		-10 °C ... +60 °C [+14 °F ... +140 °F] (non-condensing)
Protection	with reset without reset	IP40 (front side) IP41 (front side)

Options

Connector for polyamide hose	ø 4 x ø 6 mm [0.16 x 0.24“] Art. no.: 3.XXX.XXX.063
Quick connection for tube outside diameter 4 mm	QSM-M5-4 N140620 Art. no.: 3.XXX.XXX.064

Approvals

CE compliant in accordance with RoHS Directive	2011/65/EU
UKCA compliant in accordance with RoHS Regulations	S.I. 2012/3032

© Fritz Kübler GmbH, subject to errors and changes. 03/2023

Pneumatic counters | 4 digits with, 6 digits with/without, 8 digits without reset | PMk14 / PMk16 / PMk18

Panel mount with front bezel and 2 mounting holes
4 digits, manual reset
Type PMk14.11



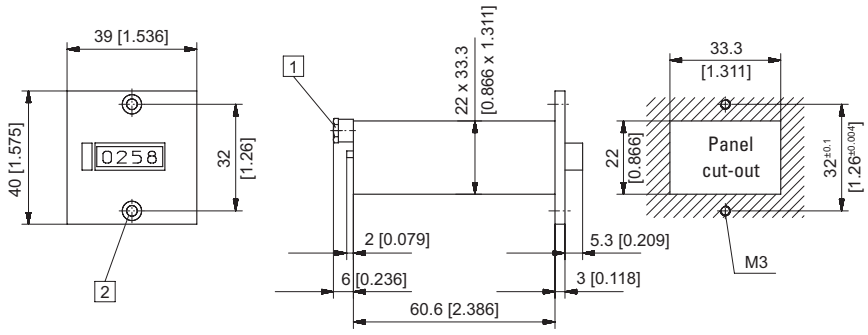

1 Inner thread M5, 4 [0.16] deep 2 Countersinking Af3 DIN 74

Type	Display	Color of housing / Art. no. grey	black	
PMk14.11	4 digits, manual reset	**3.802.110**	**3.802.111**	

Panel mount for clip mounting
4 digits, manual reset
Type PMk14.21



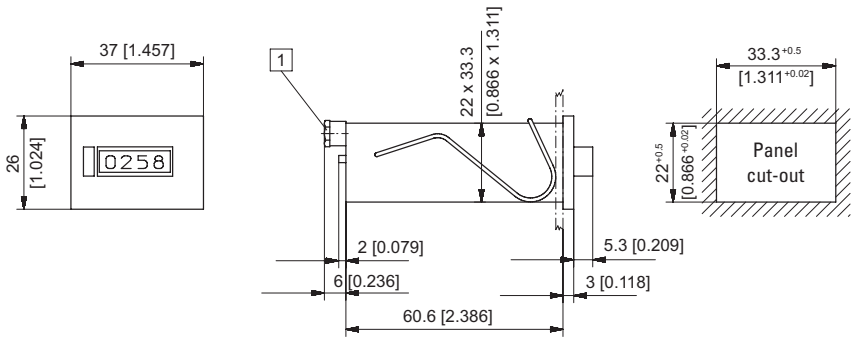

1 Inner thread M5, 4 [0.16] deep

Type	Display	Color of housing / Art. no. grey	black	
PMk14.21	4 digits, manual reset	**3.802.210**	**3.802.211**	

Panel mount with front bezel and 2 mounting holes
6 digits, manual reset
Type PMk16.11



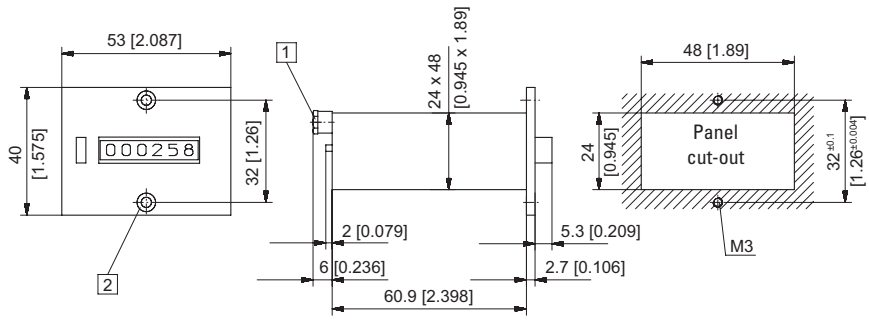

1 Inner thread M5, 4 [0.16] deep 2 Countersinking Af3 DIN 74

Type	Display	Color of housing / Art. no. grey	black	
PMk16.11	6 digits, manual reset	**3.804.110** [1)]	**3.804.111**	

Dimensions in mm [inch]

1) Stock types.

© Fritz Kübler GmbH, subject to errors and changes. 03/2023

Pneumatic counters | 4 digits with, 6 digits with/without, 8 digits without reset | PMk14 / PMk16 / PMk18

Panel mount for clip mounting
6 digits, manual reset
Type PMk16.21



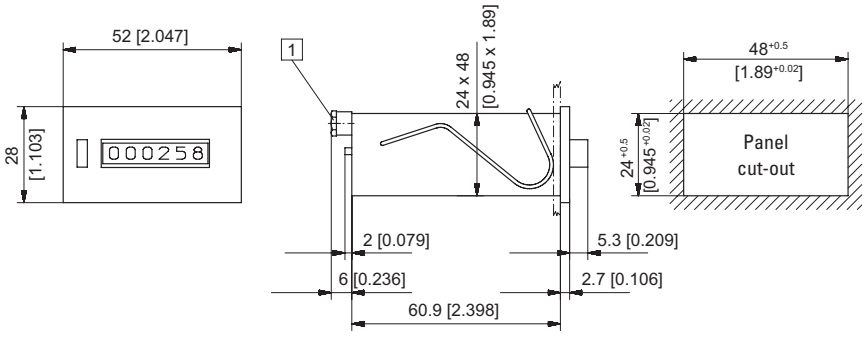

1 Inner thread M5, 4 [0.16] deep

Type	Display	Color of housing / Art. no. grey	black	
PMk16.21	6 digits, manual reset	**3.804.210**	**3.804.211**	

Panel mount with front bezel and 2 mounting holes
8 digits, without reset
Type PMk18.10



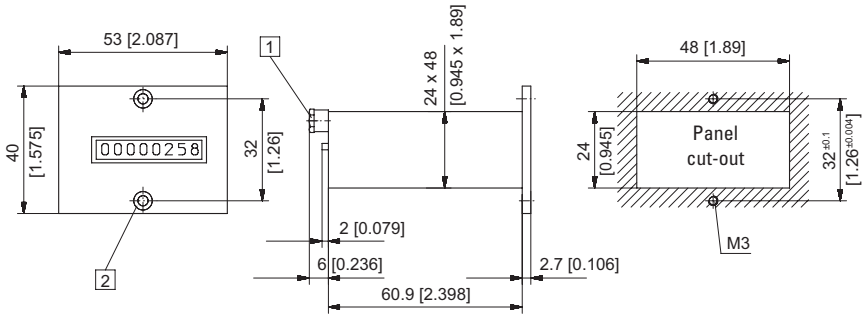

1 Inner thread M5, 4 [0.16] deep 2 Countersinking Af3 DIN 74

Type	Display	Color of housing / Art. no. grey	black	
PMk18.10	8 digits, without reset	**3.805.100**	**3.805.101**	

Panel mount for clip mounting
8 digits, without reset
Type PMk18.20



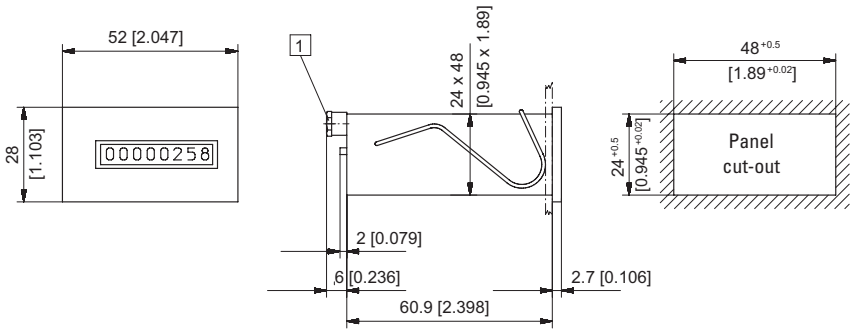

1 Inner thread M5, 4 [0.16] deep

Type	Display	Color of housing / Art. no. grey	black	
PMk18.20	8 digits, without reset	**3.805.200**	**3.805.201**	

Dimensions in mm [inch]

1) Stock types.

© Fritz Kübler GmbH, subject to errors and changes. 03/2023