BOS 23K-PA-RH10-S4
Ordering code: BOS01FL

Diffuse sensor
Series 23K
Working Range: 3...800 mm

PNP (2x), NO-NC
LED, red light
DC, direct current

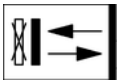

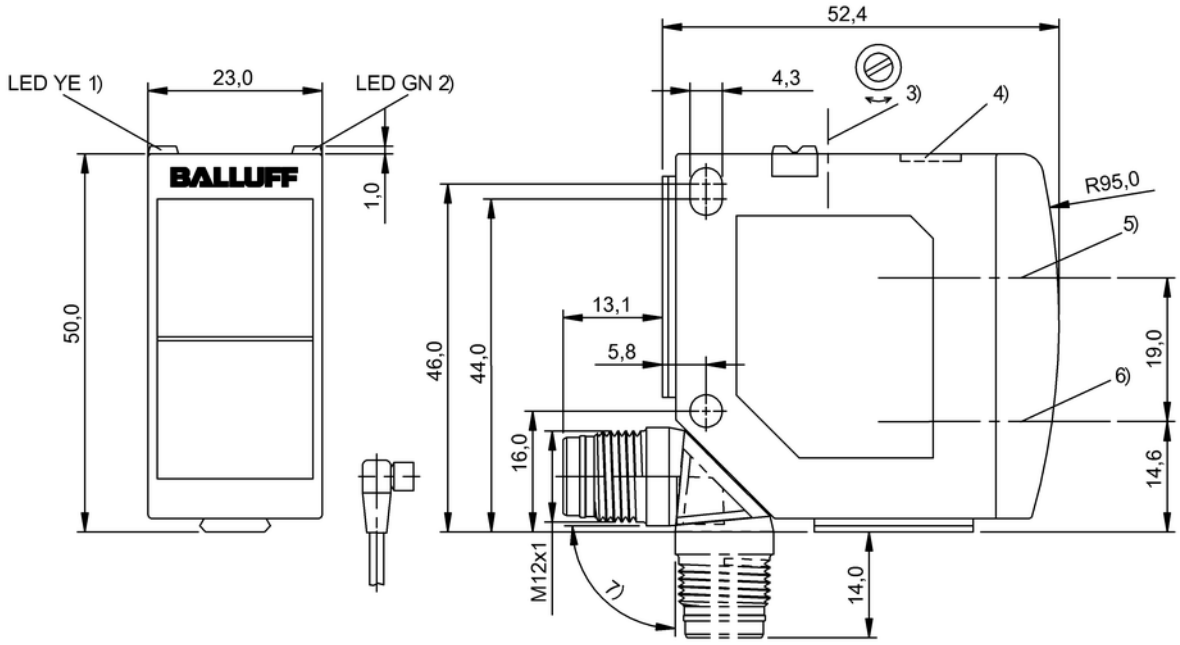

1) Output function/error, 2) Power, 3) Sn, 4) No. of bars/sens. distance, 5) Optical axis receiver, 6) Optical axis emitter, 7) 270° rotatable

Characteristic data

Operating voltage	10...30 V DC
Connection	Connector, M12x1-S04
Switching freq. f max.	600 Hz
Indicator	Switching dist. - bar display
Setting	Switching distance (Sn)
Adjuster	Adjusting screw (1x)
Short-circuit protected	yes
Protected against polarity reversal	yes
Enclosure Type per IEC 60529	IP6x
Enclosure Type DIN 40050	IPx9K
Protection class	II

Optical data

Principle of optical operation	Light scanner, triangulation
Switching function, optical	NO-NC: light-dark /dark-light
Light spot size, typical	15 mm x 15 mm at focal point
Light type	LED, red light
Wavelength	640 nm
Ambient light max.	5,000 Lux
Optical special feature	Background suppression
LED group per IEC 62471	Exempt group

Electrical data

Rated operating voltage Ue DC	24,0 V
Effective operating current Ie	100 mA
Rated insulation voltage Ui	75 V DC
Ripple max. (% of Ue)	10
Switching output	PNP (2x)
Switching function	NO-NC
Turn-off delay toff max.	0,83 ms
Turn-on delay ton max.	0,83 ms
No-load current max. Io at Ue	30 mA
Voltage drop Ud max. (at Ie)	2,0 V

Mechanical data

Eff. switching distance Sr	800 mm
Capture range Sd	3...800 mm
Beam characteristic	Focus, typ., at 500 mm
Range Sn	Sn = 800 mm, adjustable
Minimum operating distance	3 mm
Border range, energetic	1200 mm
Dist. dev. 18% max. (% of Sr)	15 %
Connector type	M12x1-S04
Sensing surface material	PMMA
Housing material	PC-ABS

Internet : www.balluff.com
Balluff Germany : +49 (0) 7158 173-0, 173-370
Balluff USA : 1-800-543-8390
Balluff China : +86 (0) 21-50 644131

BOS 23K-PA-RH10-S4
Ordering code: BOS01FL

BALLUFF
sensors worldwide

Diffuse sensor
Series 23K
Working Range: 3...800 mm

PNP (2x), NO-NC
LED, red light
DC, direct current

Mounting type	Screw M4
Design	Block, rotatable connection
Ambient temperature	-20...60 °C

Basic data

Basic standard	IEC 60947-5-2

The sensor is functional again after the overload has been eliminated.
Reference object (target): Gray card, 200 x 200, 90 % remission, axial approach.
For additional information, refer to user's guide.
Order accessories separately.

