THE INFORMATION CONTAINED IN THIS DRAWING IS THE SOLE PROPERTY OF L-COM, INC. ANY REPRODUCTION IN PART OR WHOLE WITHOUT THE WRITTEN PERMISSION OF L-COM, INC. IS PROHIBITED.

# RoHS Compliant ✔

| REVISIONS | | | |
|---|---|---|---|
| REV | DESCRIPTION | DATE | APPROVED |
| A | INITIAL RELEASE | 2/1/11 | D.GRIFFIN |
| - | - | - | - |
| | | | |
| | | | |

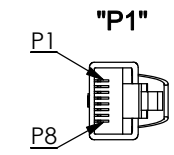


RJ45 (8X8)
SHIELDED MALE
GOLD PLATED PINS

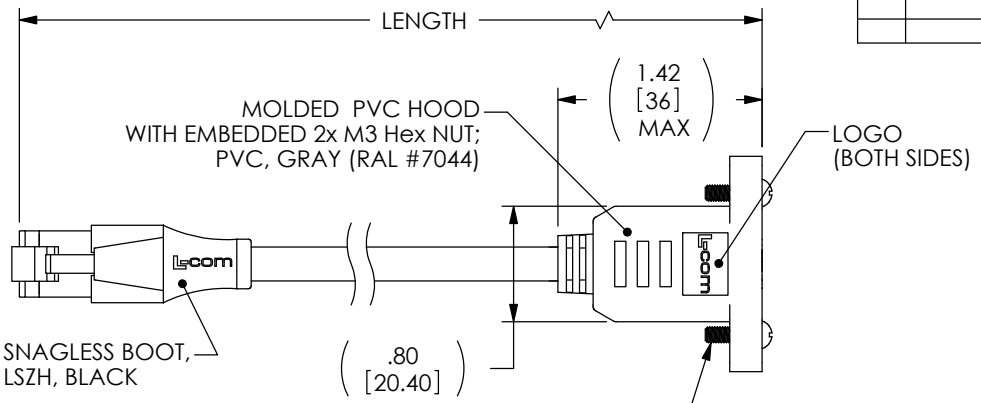


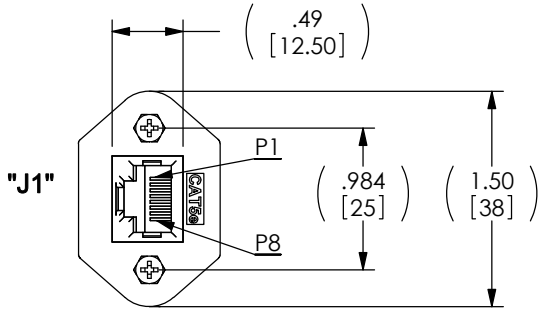


RJ45 (8X8)
SHIELDED FEMALE
GOLD PLATED CONTACTS

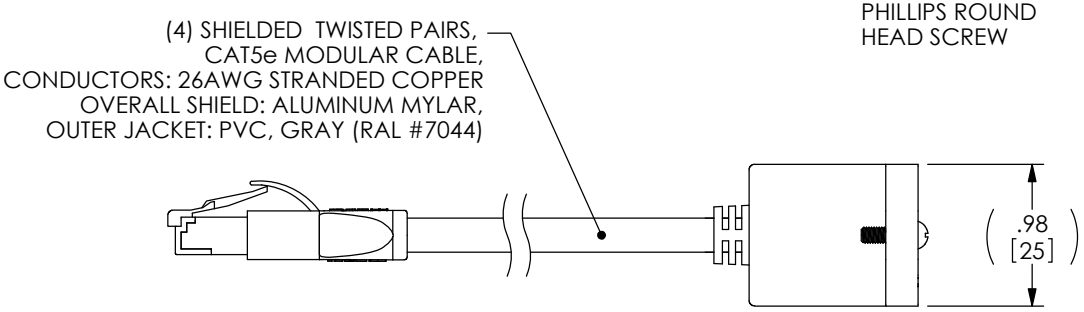


**WIRING MAP**

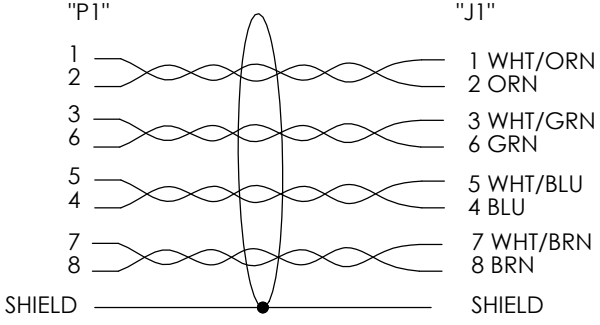


| PART NUMBER | LENGTH | |
|---|---|---|
| | FEET | [METERS] |
| TRDC5EXTSF-3 | 3.0 | [.91] |
| TRDC5EXTSF-5 | 5.0 | [1.52] |
| TRDC5EXTSF-7 | 7.0 | [2.13] |
| TRDC5EXTSF-10 | 10.0 | [3.05] |
| TRDC5EXTSF-15 | 15.0 | [4.57] |
| TRDC5EXTSF-25 | 25.0 | [7.62] |

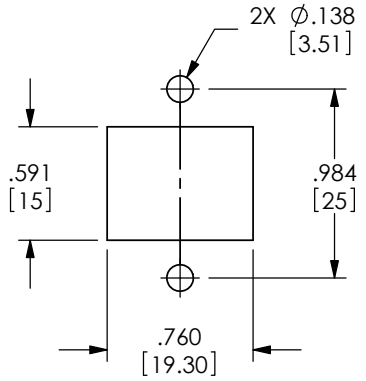


RECOMMENDED PANEL CUTOUT

**NOTES:**

1. MODULAR CONNECTOR TO MEET TIA-1096.
2. CABLE ASSEMBLY TO BE SHIPPED WITH (2) M3 X 10mm LONG PHILLIPS ROUND HEAD SCREWS
3. CABLE ASSEMBLY SHALL BE TESTED FOR CONTINUITY.
4. CABLE ASSEMBLY SHALL BE INDIVIDUALLY PACKAGED IN ACCORDANCE WITH L-COM SPEC. PS-0031.

UNLESS OTHERWISE SPECIFIED,
DIMENSIONS ARE IN INCHES [mm]
OVERALL CABLE LENGTH TOLERANCE:
≤12 [305] = +1 [25] / -0
>12 [305] ≤60 [1524] = +2 [51] / -0
>60 [1524] ≤120 [3048] = +4 [102] / -0
>120 [3048] ≤300 [7620] = +6 [152] / -0
>300 [7620] = +5% / -0%
ALL OTHER DIMENSIONAL TOLERANCES:
.X = ± .2
.XX = ± .02
.XXX = ±.005
PROJECTION

| APPROVALS | DATE |
|---|---|
| DRAWN BY D. CASTRO | 1/25/11 |
| CHECKED BY D. PARHAM | 1/26/11 |
| APPROVED BY D. GALLAGHER | 1/31/11 |

CONFIGURATION DETAILS OF UNDIMENSIONED FEATURES MAY VARY

COLOR VARIATIONS MAY OCCUR

REF

L-COM Global Connectivity
45 BEECHWOOD DRIVE
NORTH ANDOVER, MA
01845

CATEGORY
TELECOM/MODULAR

PRODUCT DESCRIPTION
CA C5E RJ45 M/F FLANGED EXTENSION SHLD

| SIZE | FSCM NO. | DWG. NO. | REV. |
|---|---|---|---|
| A | 43321 | TRDC5EXTSF | A |

SCALE: NONE | CAD FILE: TRDC5EXTSF.SLDDRW | SHEET 1 OF 1